ASSESSOR'S RECORD MAP

134–14

CASAS DEL PANTANO

DETAIL 2A

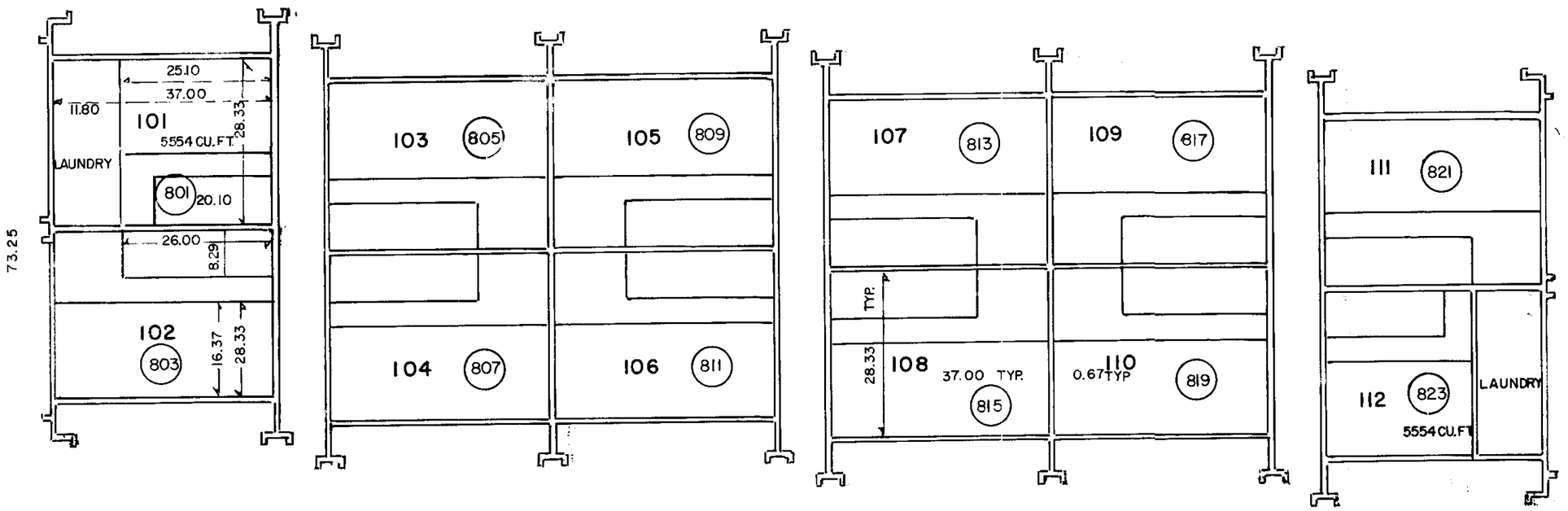

FIRST STORY FLOOR PLAN
ODD NO.

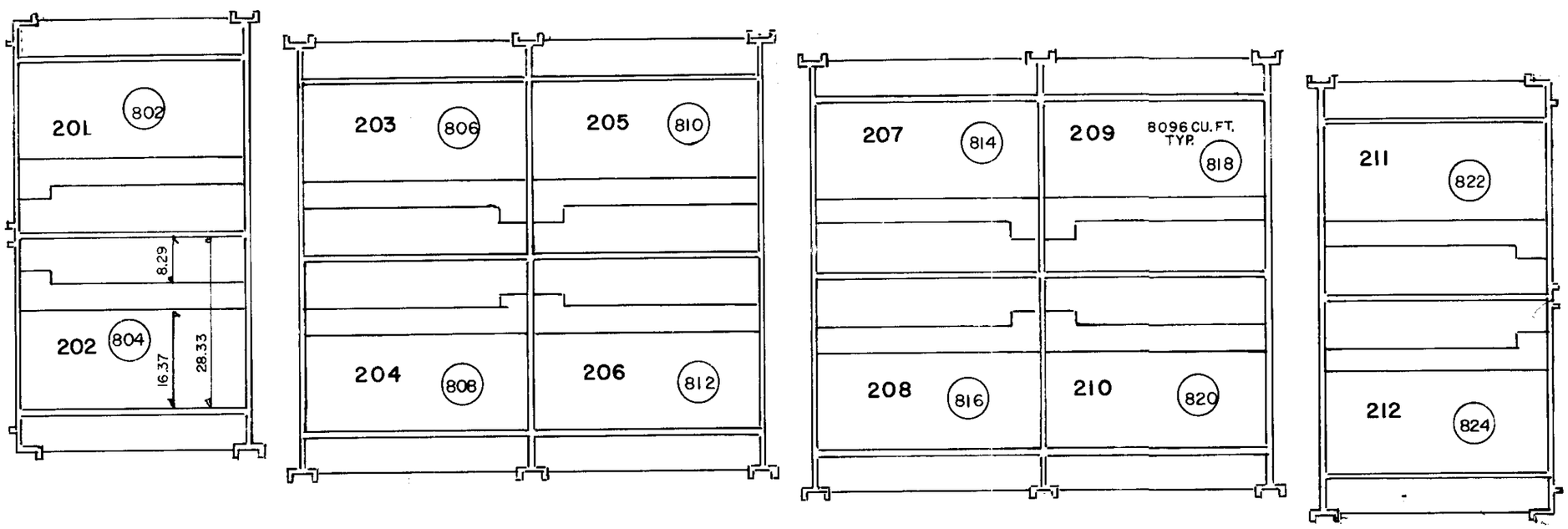

SECOND STORY FLOOR PLAN
EVEN NO.

SCALE 1" = 20' 1974

SEE DOCKET 4140, PAGE 179-201
" " 4254, " 65-81

D4254v65_02A