ASSESSOR'S RECORD MAP

112-04

ST. JAMES COURT CONDOMINIUMS
UNITS 001-024 & COMMON AREA

ALL IN CITY OF TUCSON

UNSUBDIVDED

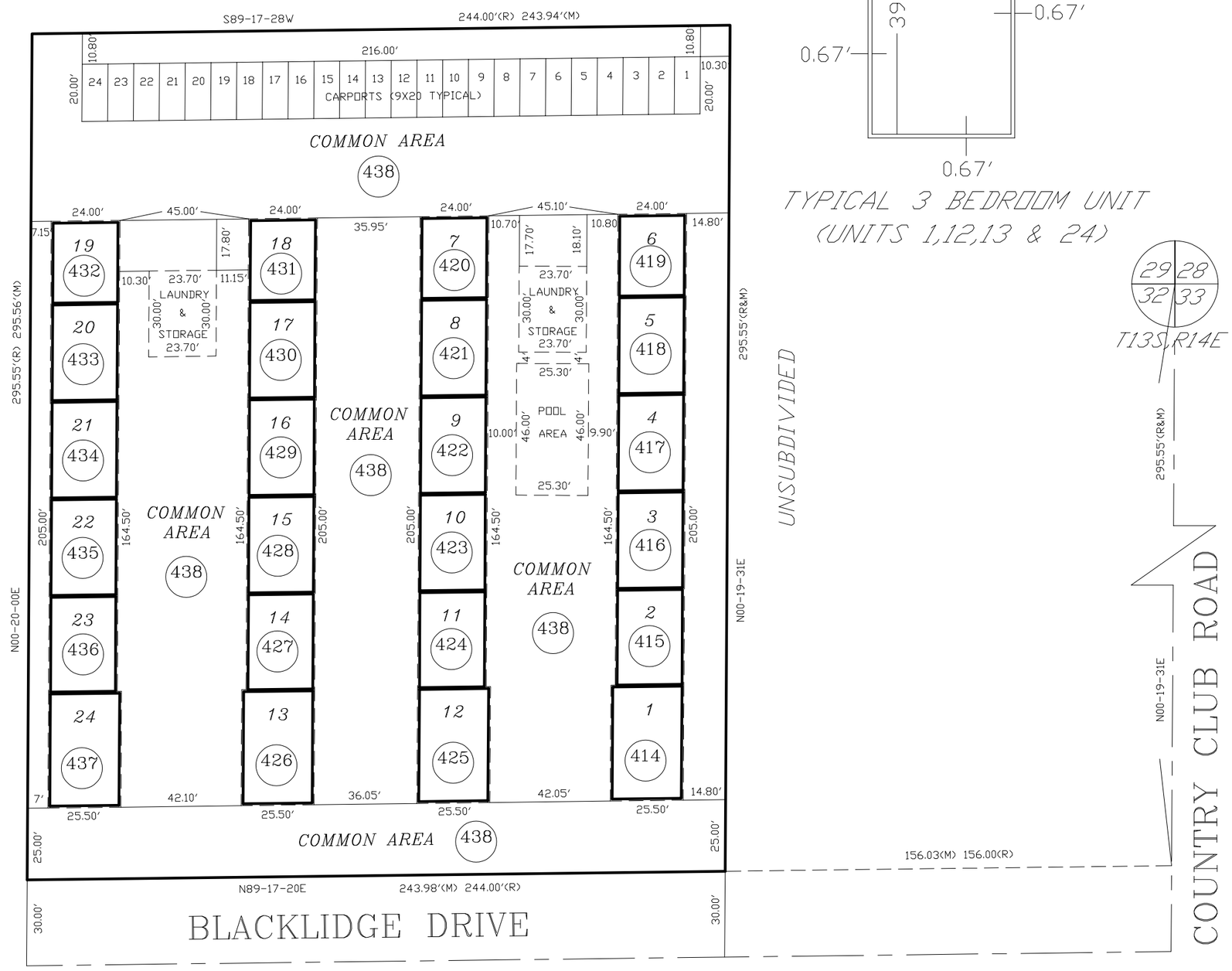

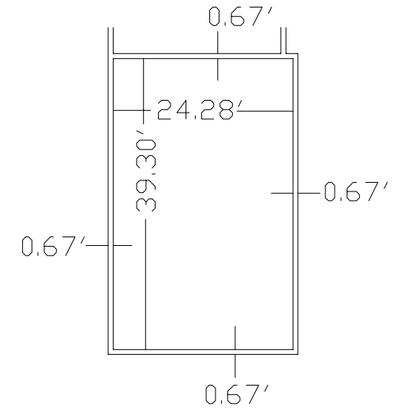

TYPICAL 3 BEDROOM UNIT
(UNITS 1,12,13 & 24)

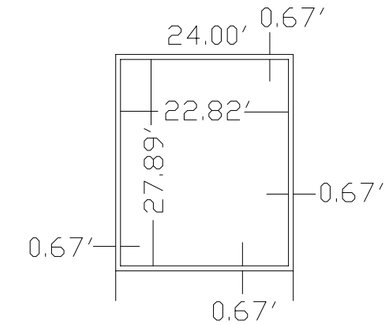

TYPICAL 1 BEDROOM UNIT
(UNITS 6,7,18 & 19)

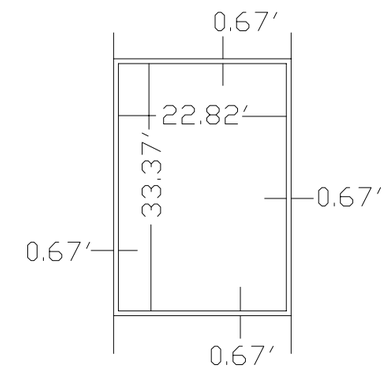

TYPICAL 2 BEDROOM UNIT
(UNITS 2-5,8-11,14-17,20-23)

pima county assessor

SEE BOOK 26 PAGE 091 M&P
1975-2

S32,T13S,R14E SD:04/12/19

:\MP26\26091- 04/12/19 SBG

0 20 40 60 80
FEET