ASSESSOR'S RECORD MAP

125-17

6 / 7

TAMARACK CONDOMINIUMS

UNITS 1 THRU 58

SHEET No. 6

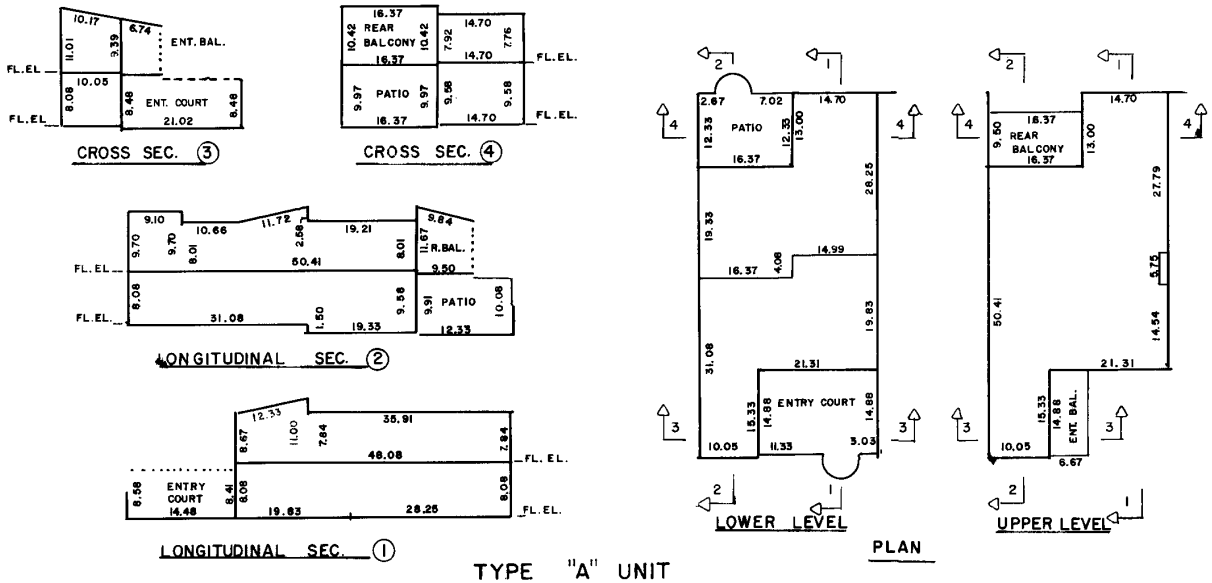

TYPE "A" UNIT

(TYPE A^R = OPPOSITE HAND)

SCALE: 1" = 20'

SEE BOOK 26, PAGE 32

1975

M26032_06

1049 (3)