ASSESSOR'S RECORD MAP

224-33

EXECUTIVE TOWNHOMES

LOTS 001-016, 1P, 8P, 15P & COMMON AREA A

FORMERLY
203-24

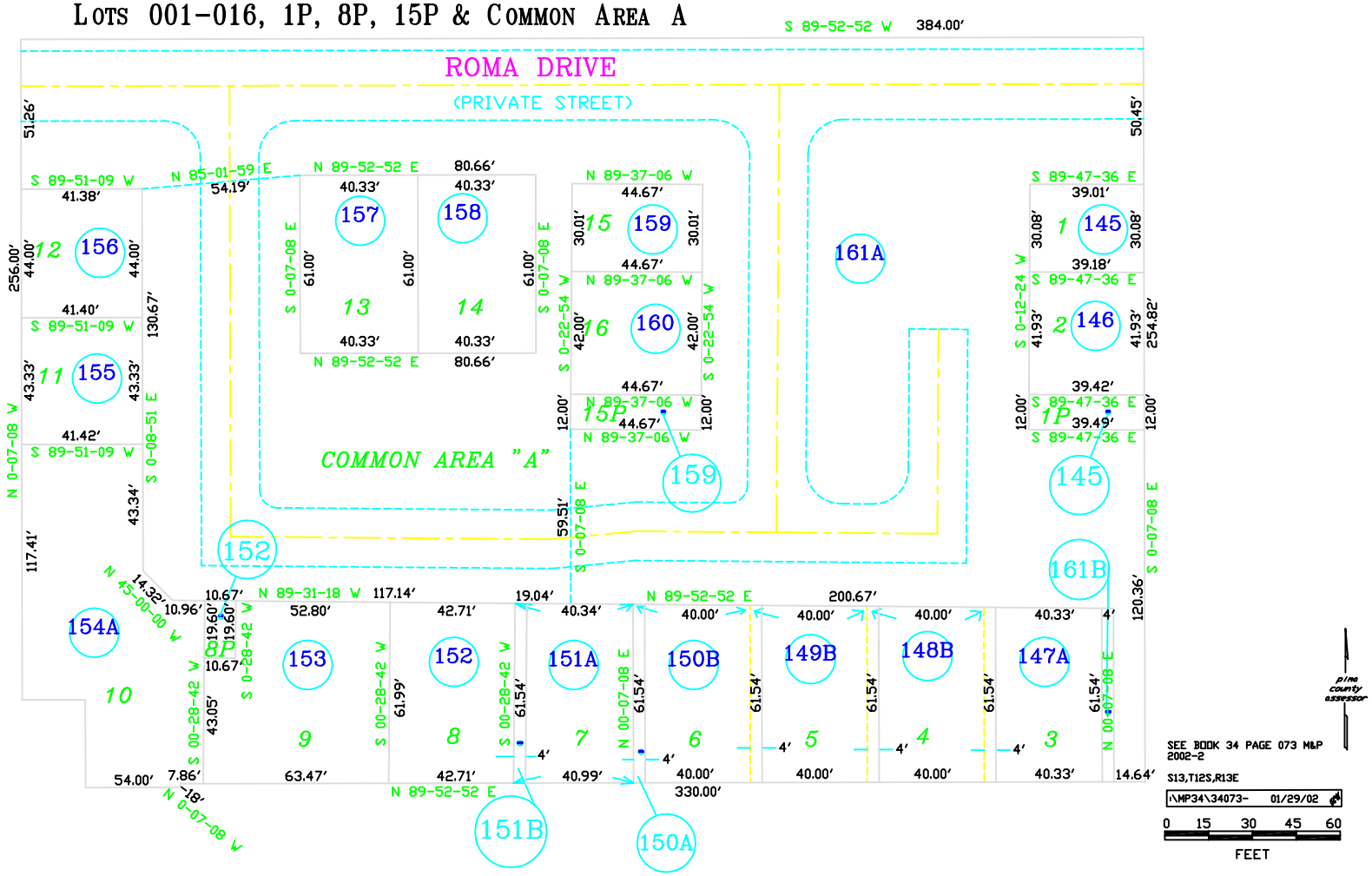

CCS