ASSESSOR'S RECORD MAP

133 - 24

SUMMERTREE CONDOMINIUMS
UNITS 1 - 224, COMMON AREAS A & B
TYPICAL FLOOR PLAN

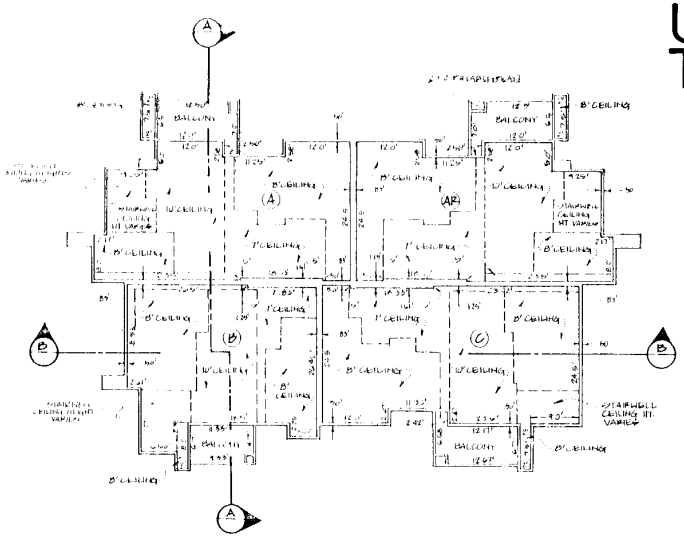

UPPER FLOOR PLAN TYPICAL

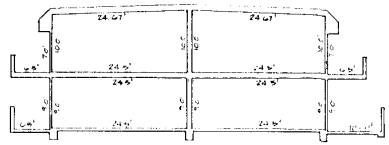

A - A

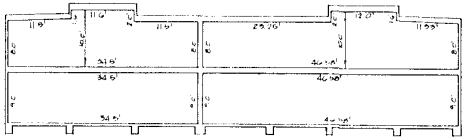

B - B

BUILDING CROSS SECTIONS

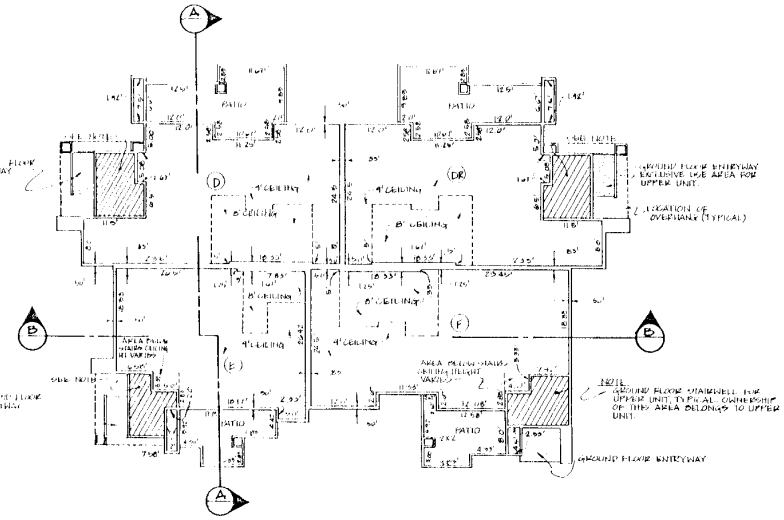

LOWER FLOOR PLAN TYPICAL

TABLE OF CUBIC CONTENTS
(INCLUDING PATIOS / BALCONIES)

Unit No.	Unit Type	Cubic Content	Building Address
1	K	7899.10	7900
2	B	6894.04	7900
3	F	10217.96	7900
4	C	7079.29	7900
5	DR	10815.16	7900
6	AR	10566.30	7900
7	D	10815.16	7900
8	A	10566.30	7900
9	DR	10815.16	7904
10	AR	10566.30	7904
11	D	10815.16	7904
12	A	10566.30	7904
13	E	7899.10	7904
14	B	6894.04	7904
15	F	10217.96	7904
16	C	7079.29	7904
17	DR	10815.16	7908
18	AR	10566.30	7908
19	D	10815.16	7908
20	A	10566.30	7908
21	E	7899.10	7908
22	B	6894.04	7908
23	F	10217.96	7908
24	C	7079.29	7908
25	E	7899.10	7909
26	B	6894.04	7909
27	F	10217.96	7909
28	C	7079.29	7909
29	C	10815.16	7909
30	A	10566.30	7909
31	DR	10815.16	7909
32	AR	10566.30	7909
33	F	10217.96	7912
34	C	7079.29	7912
35	DR	10815.16	7912
36	AR	10566.30	7912
37	E	7899.10	7912
38	B	6894.04	7912
39	D	10815.16	7912
40	A	10566.30	7912
41	F	10217.96	7913
42	C	7079.29	7913
43	E	7899.10	7913
44	B	6894.04	7913
45	DR	10815.16	7913
46	AR	10566.30	7913
47	D	10815.16	7913
48	A	10566.30	7913
49	D	10815.16	7916
50	A	10566.30	7916
51	DR	10815.16	7916
52	AR	10566.30	7916
53	E	7899.10	7916
54	B	6894.04	7916
55	F	10217.96	7916
56	C	7079.29	7916
57	DR	10815.16	7917
58	AR	10566.30	7917
59	F	10217.96	7917
60	C	7079.29	7917
61	D	10815.16	7917
62	A	10566.30	7917
63	E	7899.10	7917
64	B	6894.04	7917
65	D	10815.16	7920
66	A	10566.30	7920
67	DR	10815.16	7920
68	AR	10566.30	7920
69	F	10217.96	7920
70	C	7079.29	7920
71	E	7899.10	7920
72	B	6894.04	7920
73	E	7899.10	7921
74	B	6894.04	7921
75	D	10815.16	7921
76	A	10566.30	7921
77	DR	10815.16	7921
78	AR	10566.30	7921
79	F	10217.96	7921
80	C	7079.29	7921
81	D	10815.16	7924
82	A	10566.30	7924
83	DR	10815.16	7924
84	AR	10566.30	7924
85	F	10217.96	7924
86	C	7079.29	7924
87	E	7899.10	7924
88	B	6894.04	7924
89	DR	10815.16	7928
90	AR	10566.30	7928
91	F	10217.96	7928
92	C	7079.29	7928
93	E	7899.10	7928
94	B	6894.04	7928
95	D	10815.16	7928
96	A	10566.30	7928
97	E	7899.10	7932
98	B	6894.04	7932
99	D	10815.16	7932
100	A	10566.30	7932
101	DR	10815.16	7932
102	AR	10566.30	7932
103	F	10217.96	7932
104	C	7079.29	7932
105	D	10815.16	7936
106	A	10566.30	7936
107	DR	10815.16	7936
108	AR	10566.30	7936
109	E	7899.10	7936
110	B	6894.04	7936
111	F	10217.96	7936
112	C	7079.29	7936
169	B	7899.10	7953
170	B	6894.04	7953
171	D	10815.16	7953
172	A	10566.30	7953
173	F	10217.96	7953
174	C	7079.29	7953
175	DR	10815.16	7953
176	AR	10566.30	7953
177	D	10815.16	7956
178	A	10566.30	7956
179	DR	10815.16	7956
180	AR	10566.30	7956
181	E	7899.29	7956
182	B	6894.04	7956
183	F	10217.96	7956
184	C	7079.29	7956
185	E	7899.10	7957
186	B	6894.04	7957
187	D	10815.16	7957
188	A	10566.30	7957
189	F	10217.96	7957
190	C	7079.29	7957
191	DR	10815.16	7957
192	AR	10566.30	7957
193	E	7899.10	7960
194	B	6894.04	7960
195	F	10217.96	7960
196	C	7079.29	7960
197	DR	10815.16	7960
198	AR	10566.30	7960
199	D	10815.16	7960
200	A	10566.30	7960
201	E	7899.10	7964
202	B	6894.04	7964
203	D	10815.16	7964
204	A	10566.30	7964
205	F	10217.96	7964
206	C	7079.29	7964
207	DR	10815.16	7964
208	AR	10566.30	7964
209	F	10217.96	7968
210	C	7079.29	7968
211	E	7899.10	7968
212	B	6894.04	7968
213	DR	10815.16	7968
214	AR	10566.30	7968
215	D	10815.16	7968
216	A	10566.30	7968
217	DR	10815.16	7972
218	AR	10566.30	7972
219	D	10815.16	7972
220	A	10566.30	7972
221	E	7899.10	7972
222	B	6894.04	7972
223	F	10217.96	7972
224	C	7079.29	7972
113	E	7899.10	7937
114	B	6894.04	7937
115	D	10815.16	7937
116	A	10566.30	7937
117	DR	10815.16	7937
118	AR	10566.30	7937
119	F	10217.96	7937
120	C	7079.29	7937
121	D	10815.16	7940
122	A	10566.30	7940
123	E	7899.10	7940
124	B	6894.04	7940
125	F	10217.96	7940
126	C	7079.29	7940
127	DR	10815.16	7940
128	AR	10566.30	7940
129	D	10815.16	7944
130	A	10566.30	7944
131	DR	10815.16	7944
132	AR	10566.30	7944
133	E	7899.10	7944
134	B	6894.04	7944
135	F	10217.96	7944
136	C	7079.29	7944
137	F	10217.96	7945
138	C	7079.29	7945
139	E	7899.10	7945
140	B	6894.04	7945
141	D	10815.16	7945
142	A	10566.30	7945
143	DR	10815.16	7945
144	AR	10566.30	7945
145	DR	10815.16	7948
146	AR	10566.30	7948
147	F	10217.96	7948
148	C	7079.29	7948
149	D	10815.16	7948
150	A	10566.30	7948
151	E	7899.10	7948
152	B	6894.04	7948
153	D	10815.16	7949
154	A	10566.30	7949
155	DR	10815.16	7949
156	AR	10566.30	7949
157	E	7899.10	7949
158	B	6894.04	7949
159	F	10217.96	7949
160	C	7079.29	7949
161	F	10217.96	7952
162	C	7079.29	7952
163	E	7899.10	7952
164	B	6894.04	7952
165	DR	10815.16	7952
166	AR	10566.30	7952
167	D	10815.16	7952
168	A	10566.30	7952

NOTE: CUBIC CONTENT SPACE OF ALL BUILDINGS (MEASURED TO THE OUTSIDE OF THE BUILDING WALLS) ARE IDENTICAL. CUBIC CONTENT OF EACH INDIVIDUAL BUILDING IS: 86132.13.

LEGEND

- FOUND SURVEY MONUMENT AS NOTED
- SET SURVEY MONUMENT BRASS CAP IN CONCRETE STAMPED LS 9432
- SET 1/2" IRON PIN TAGGED LS 9432

SCALE - 1" = 20'

SEE BOOK 36, PAGE 75, M.&P.

1984

M36075_UNIT

1342 (6)