ASSESSOR'S RECORD MAP

114-15

PINNACLE CANYON CONDOMINIUM
UNITS 001-225 & COMMON AREA A & B

DETAIL 3

(RESUB 43/074 M&P)

EXTERIOR DIMENSIONS-BUILDING TYPE 1
BUILDING 9, 10, 12 & 14

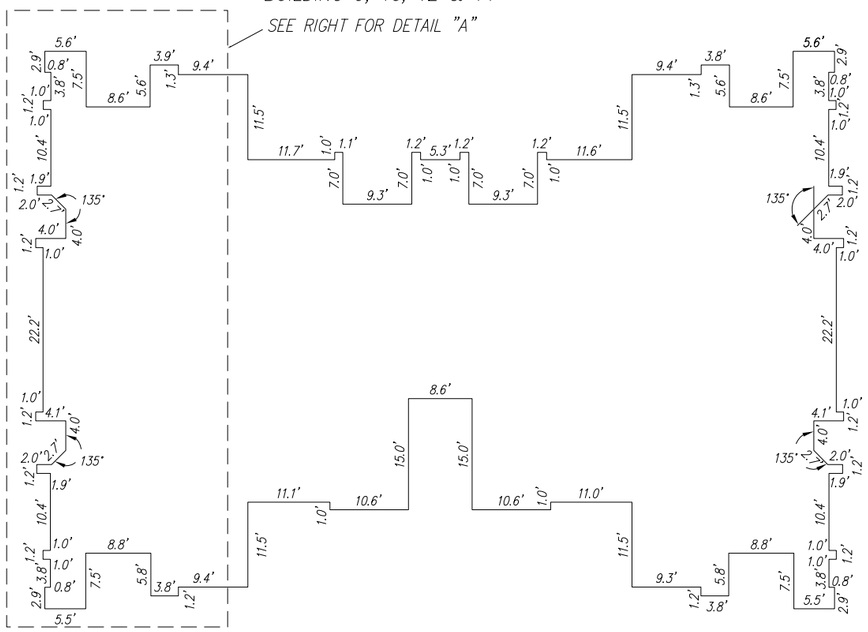

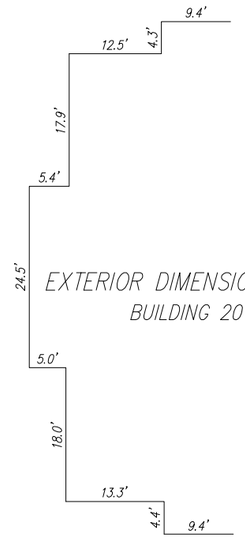

EXTERIOR DIMENSIONS-TYPE 1A
BUILDING 20

DETAIL "A"

EXTERIOR DIMENSIONS-TYPE 2
BUILDING 2, 3, 11, 15 & 17

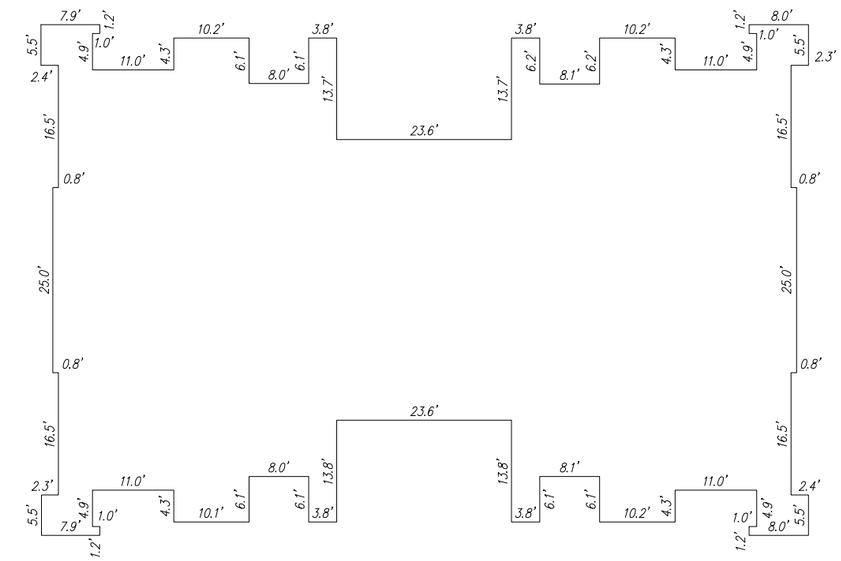

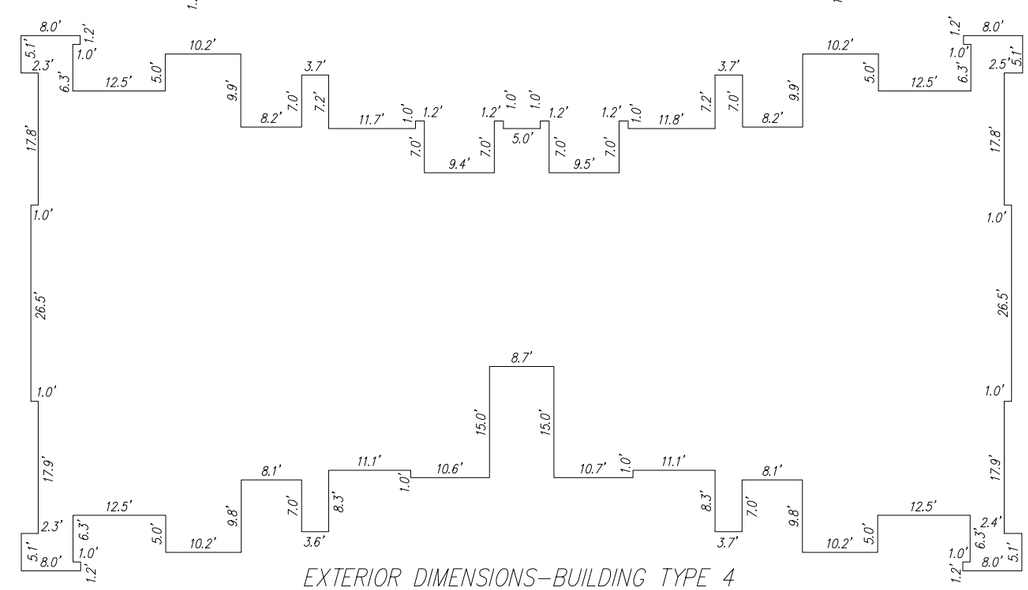

EXTERIOR DIMENSIONS-BUILDING TYPE 4
BUILDINGS 1, 4, 5, 6, 8, 13 & 16

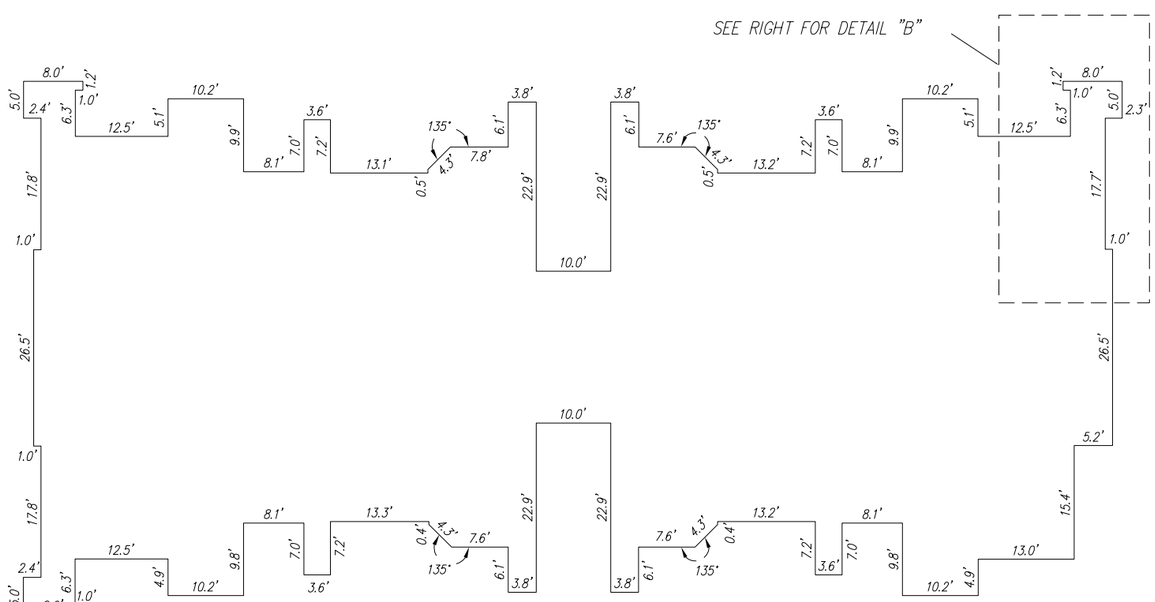

EXTERIOR DIMENSIONS-BUILDING TYPE 3
BUILDING 7

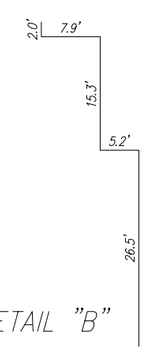

DETAIL "B"

EXTERIOR DIMENSIONS-BUILDING TYPE 3A
BUILDING 18 & 19

pima county assessor

SEE BOOK 60 PAGE 060 M&P
2006-1

S18,T13S,R15E

:\MP60\60060_03- 05/14/07 DML

0 60 120 180 240

FEET

"ELECTRONIC DATA PROVIDED"

C.O.T.
PROJECT

CCS