Assessor's Record Map

220-08

The Boulders At La Reserve Condominiums
Units: 2101-17208
& Common Area G1-C343

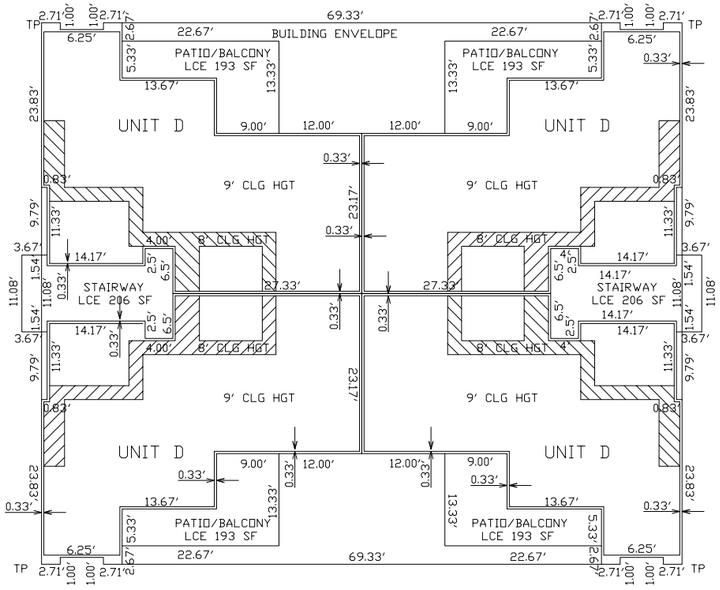

BUILDING NO'S - 5,11
FIRST AND SECOND FLOOR

Curve Table

LINE TABLE

No.	DIRECTION	DISTANCE
L1	S 62°36'08" E	20.00
L2	N 4°37'41" E	15.00
L2(M)	N 3°45'50" E	15.32
L3	S 56°44'02" E	41.00
L3(C)	N 56°44'15" E	41.32
L4	S 54°26'50" W	50.00
L4(C)	S 54°25'35" W	50.03
L5	N 70°09'39" W	52.82
L6	N 83°15'10" W	25.96
L7	S 88°51'41" W	33.78
L8	N 53°53'33" E	36.38

CURVE TABLE

No.	DELTA	ARC	RADIUS
C1	2°15'43"	15.00	380.00
C2	22°53'28"	127.85	320.00
C3	33°07'08"	184.97	320.00
C4	48°22'29"	270.18	320.00
C5	20°35'01"	136.52	380.00
C6	37°47'24"	46.13	70.00
C6(M)	37°45'24"	46.13	70.00
C7	20°35'01"	136.52	380.00

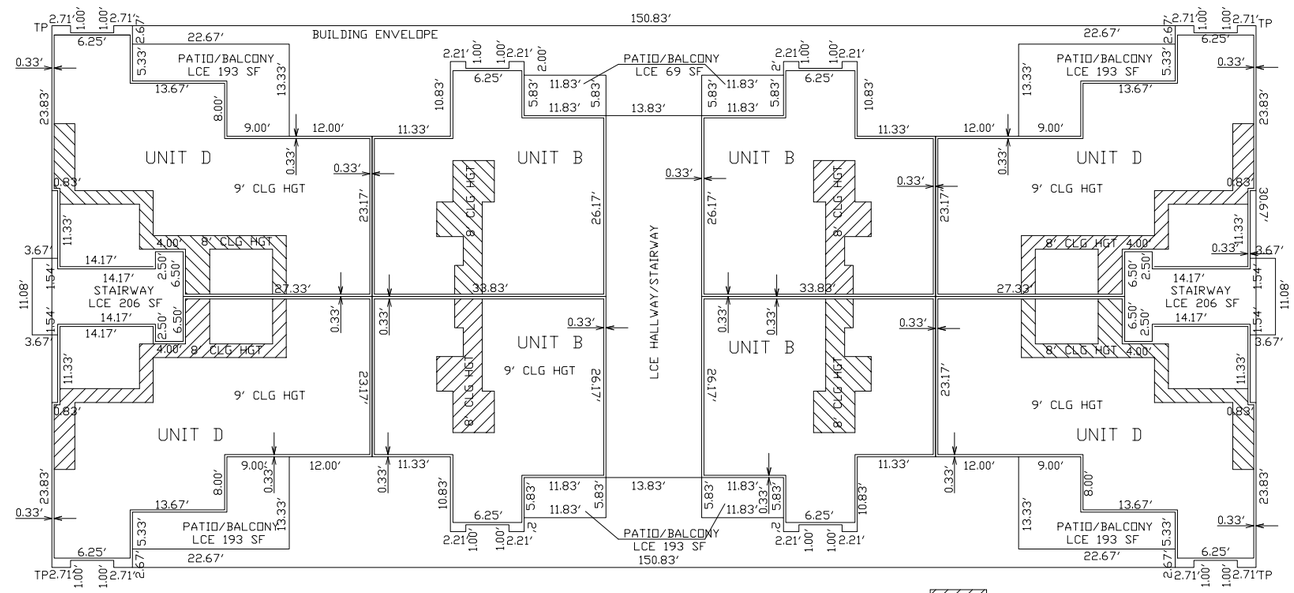

BUILDING NO'S - 4,6,7,8,16,17
FIRST AND SECOND FLOOR

8' CLG HGT — LIMITS OF DROPPED CEILING

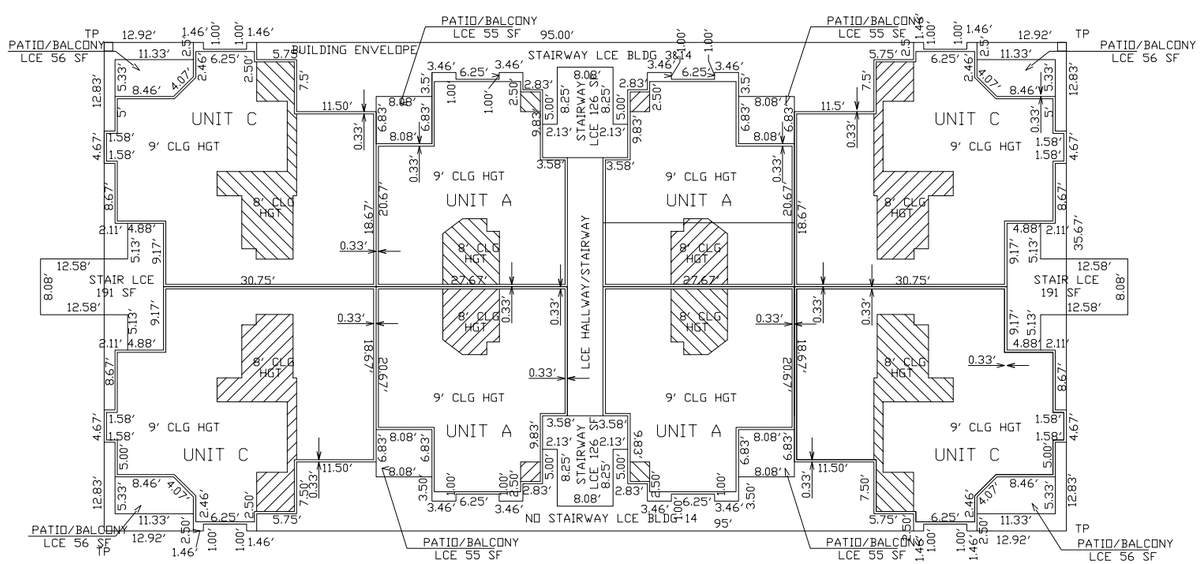

BUILDING NO'S - 2,3,9,10,12,13,14,15
FIRST AND SECOND FLOOR

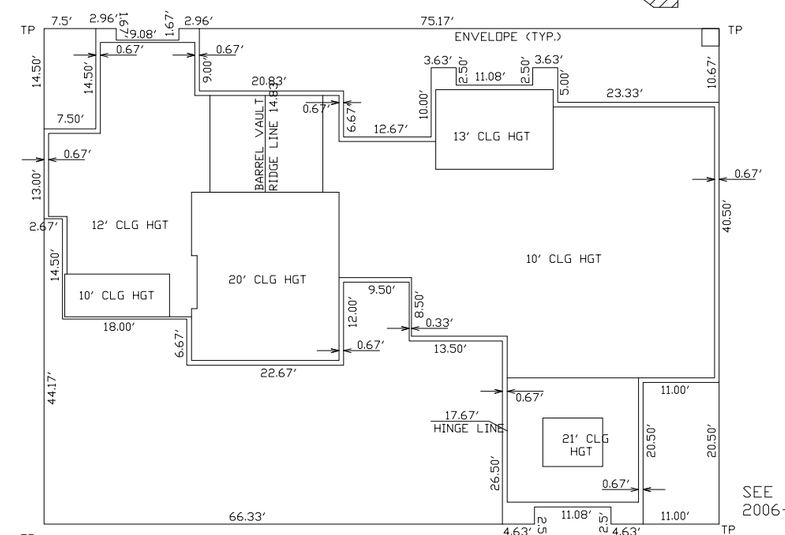

BUILDING NO - 1

C.O.T. PROJECT

CCS

pima county assessor

SEE BOOK 60 PAGE 096 M&P 2006-1

S07,T12S,R14E

:\MP60\60096_CT- 10/04/06 SA DML

0 50 100 150 200

FEET

"ELECTRONIC DATA PROVIDED"