ASSESSOR'S RECORD MAP

108-02

SKYLINE VILLAGE CONDOMINIUM

UNITS 1-168 & COMMON AREAS A & B

DETAIL 2

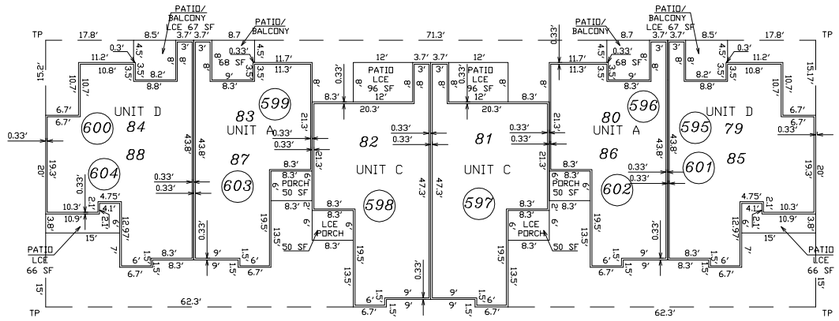

BUILDING 10 FIRST AND SECOND FLOORS

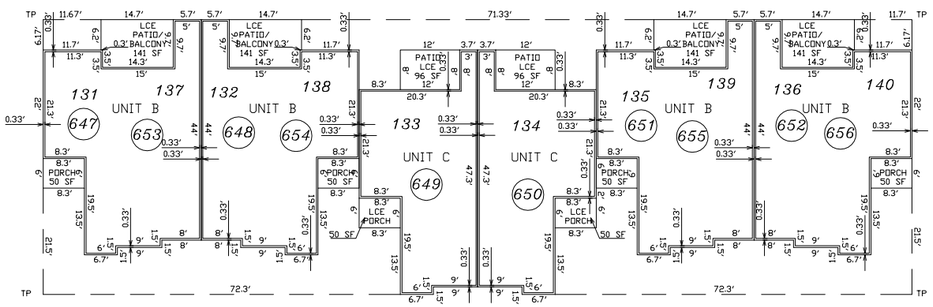

BUILDING 15 FIRST AND SECOND FLOORS

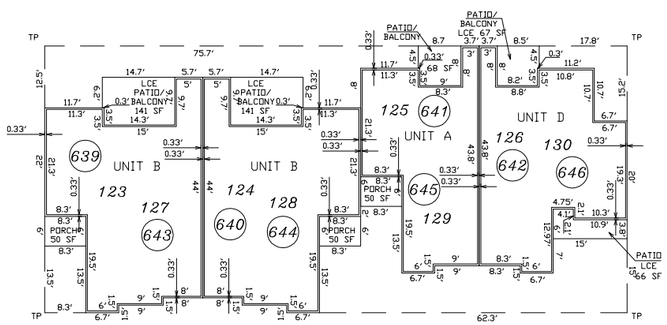

BUILDING 14 FIRST AND SECOND FLOORS

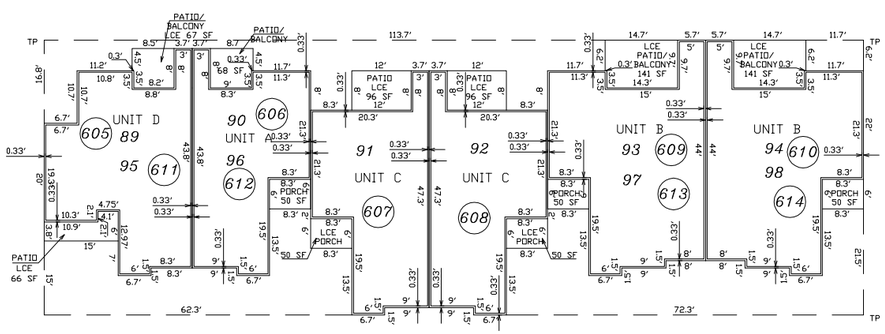

BUILDING 11 FIRST AND SECOND FLOORS

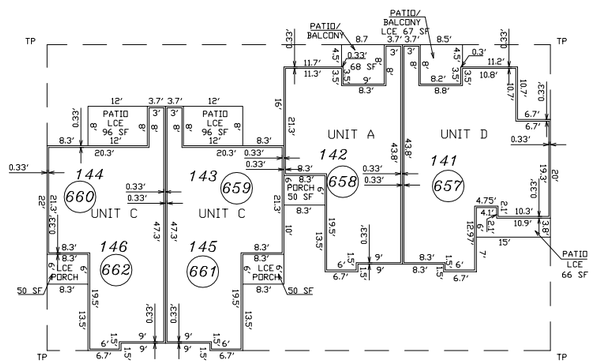

BUILDING 16 FIRST AND SECOND FLOORS

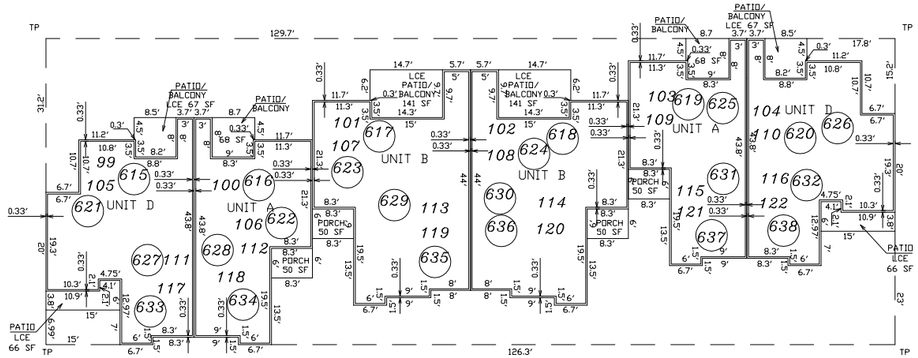

BUILDING 12 AND 13 FIRST AND SECOND FLOORS

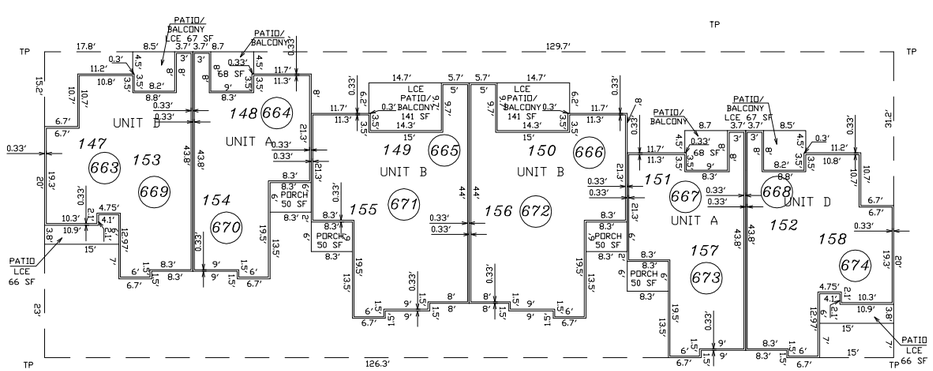

BUILDING 17 FIRST AND SECOND FLOORS

pima county assessor

SEE BOOK 61 PAGE 014 M&P 2006-1

S05,T13S,R14E

:\MP61\61014_02 04/02/07 DML

0 15 30 45 60

FEET

"ELECTRONIC DATA PROVIDED"