ASSESSOR'S RECORD MAP

108-28

RIO CANCION CONDOMINIUMS
UNITS 1-380 & COMMON ELEMENTS A & B
DETAIL 8

BUILDING TYPE W

BUILDING TYPE X

BUILDING TYPE Y

BUILDING TYPE Z

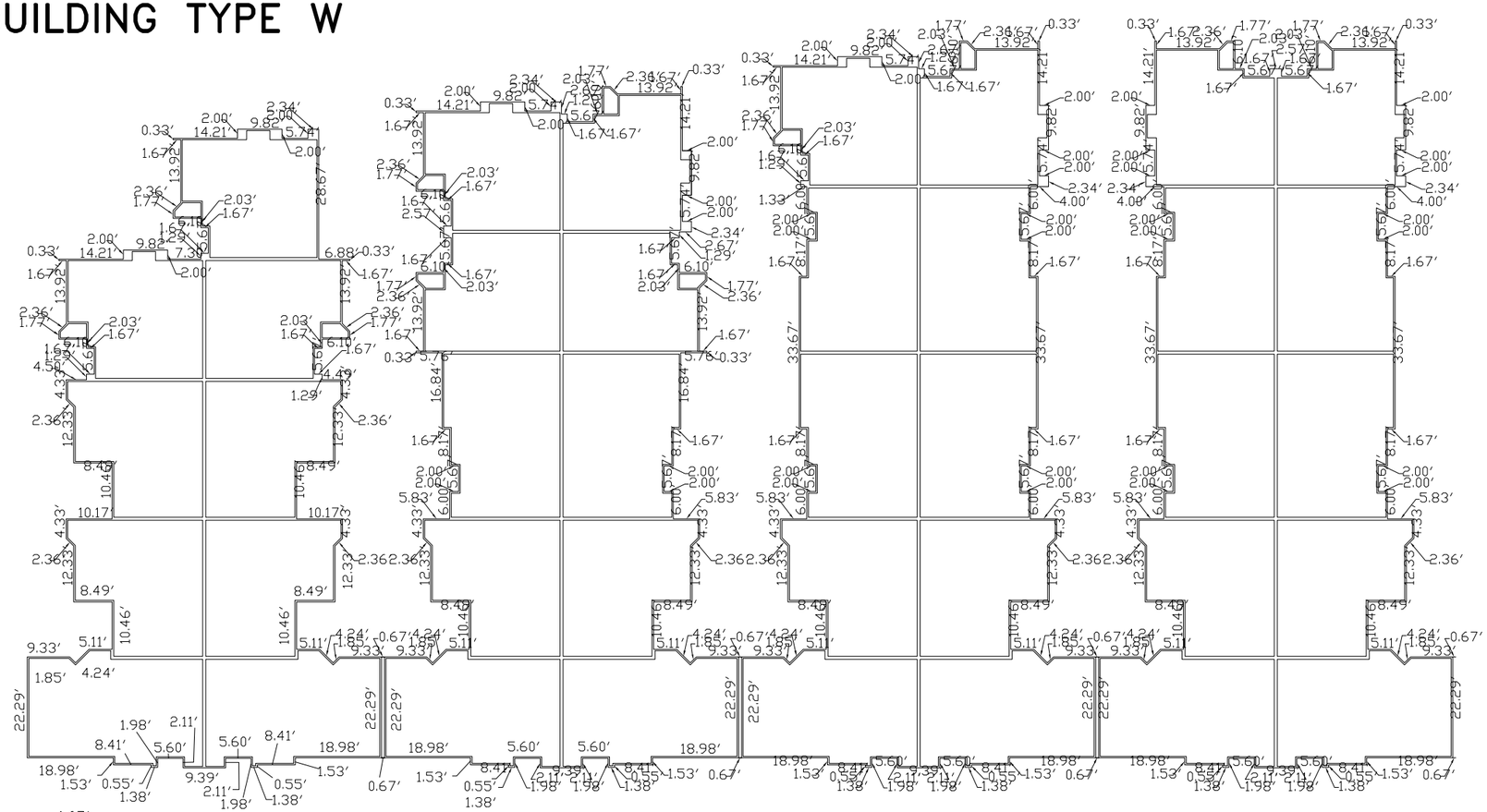

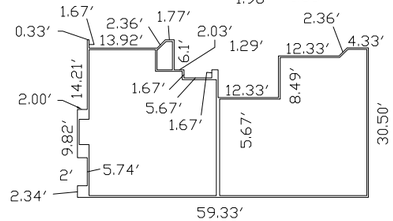

BUILDING TYPE AA

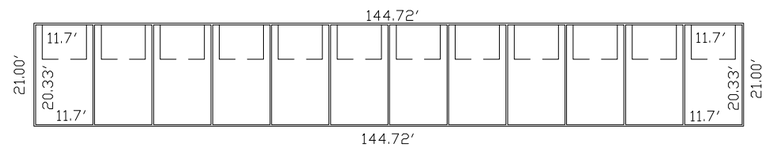

BUILDING TYPE GG

pima county assessor

SEE BOOK 61 PAGE 075 M&P 2007-1

S20,T13S,R14E

:\MP61\61075_08- 03/15/08 SCK DML

0 15 30 45 60

FEET

"ELECTRONIC DATA PROVIDED"

CCS