ASSESSOR'S RECORD MAP DETAIL (BUILDING LAYOUT)

111-07

GEORGETOWN CONDOMINIUMS

UNITS 1-96 & COMMON ELEMENTS A, B-1 THRU B-112, C-1 THRU C-8 & D

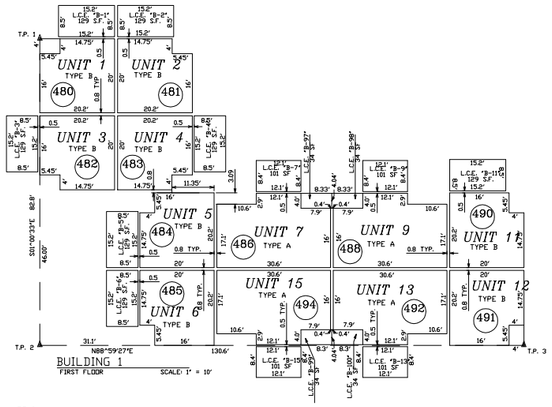

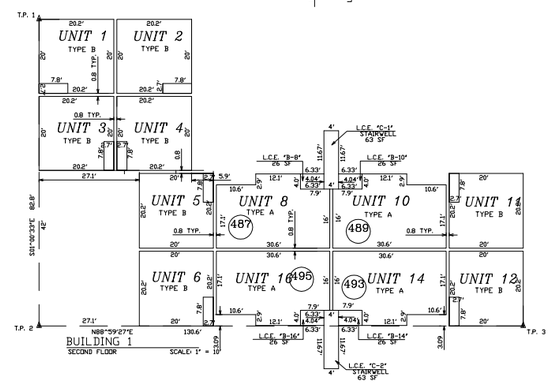

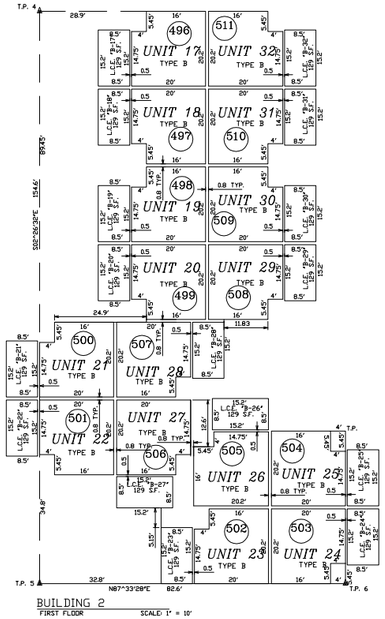

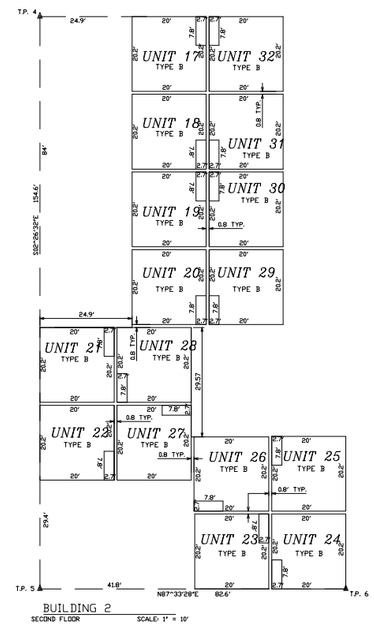

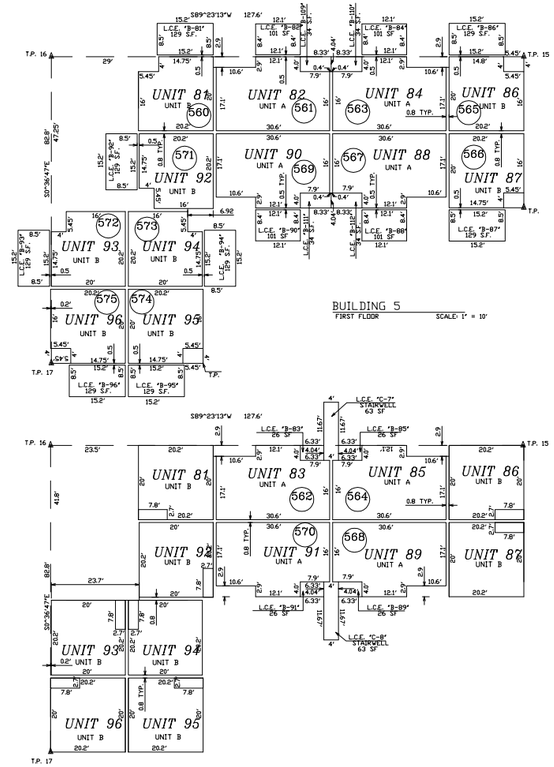

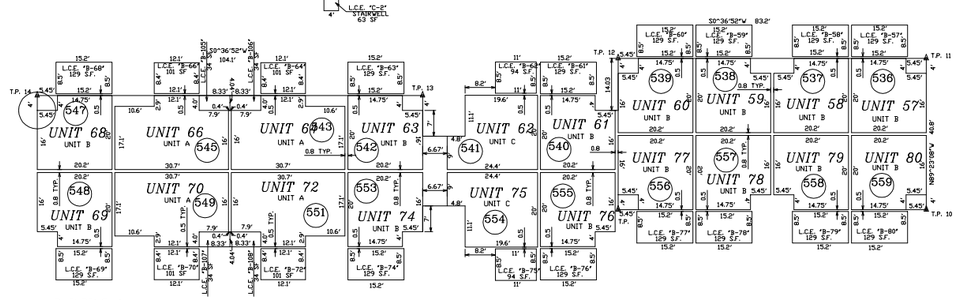

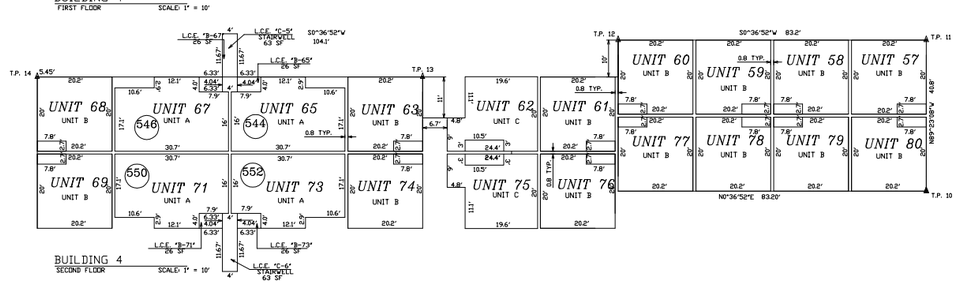

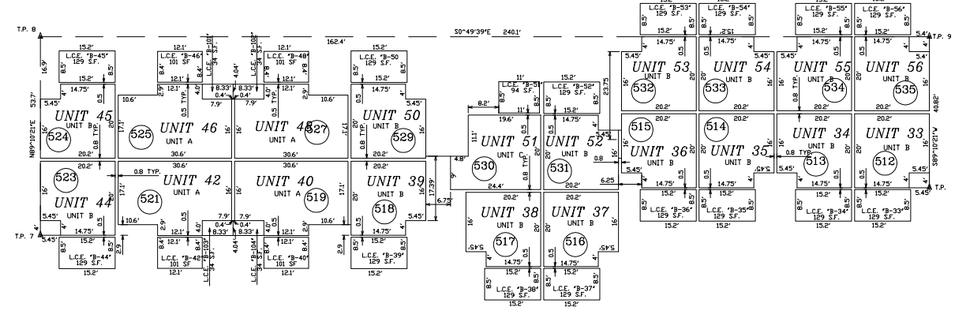

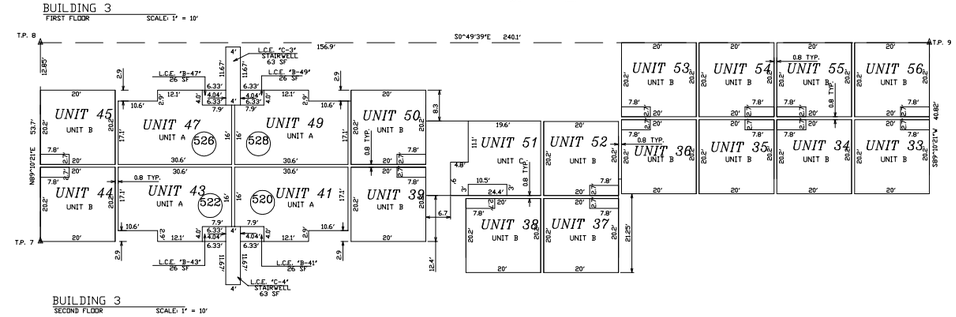

pima county assessor

SEE BOOK 62 PAGE 52 M&P 2007-1

S33,T13S,R14E

:\MP62\62052_BLD-07/01/08

0 20 40 60 80

FEET

"ELECTRONIC DATA PROVIDED"