ASSESSOR'S RECORD MAP

131-13

DETAIL 1

(RESUB 16/084 M&P)

SAN SIMEON

LOTS 001-070 & COMMON ELEMENTS B, P, & A

2ND FLR

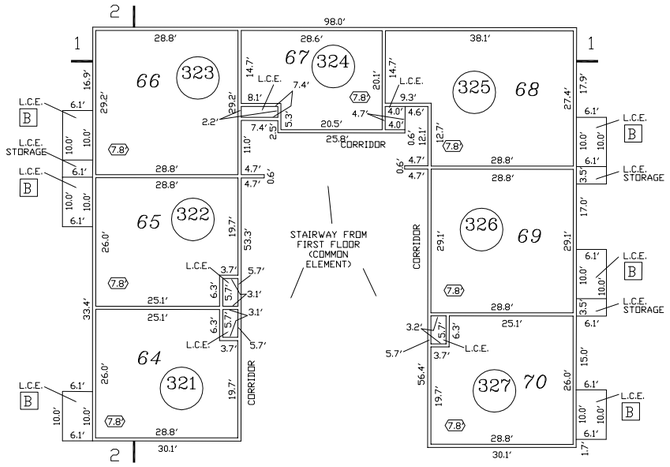

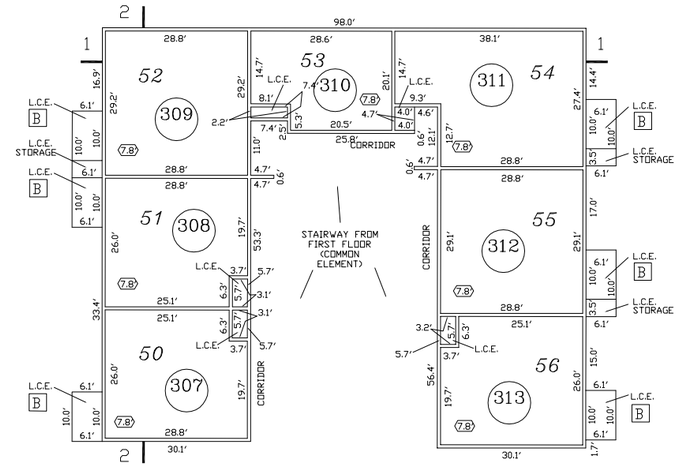

6091

6101

1ST FLR

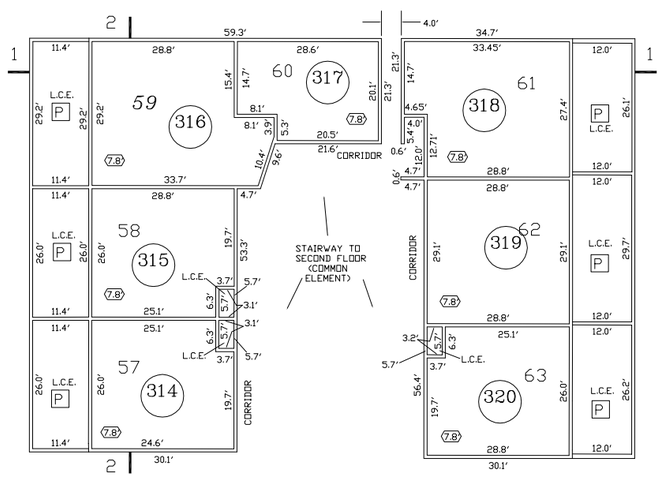

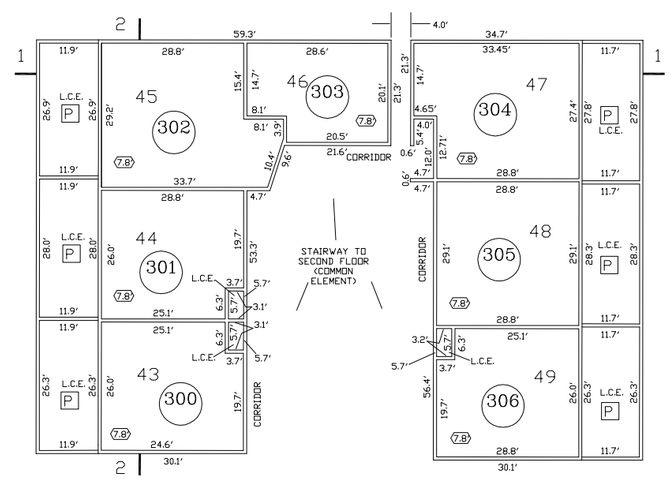

pima county assessor

SEE BOOK 63 PAGE 034 M&P 2008-1

S24,T14S,R14E

:\MP63\63034_01- 07/08/11 DML

0 15 30

FEET

"ELECTRONIC DATA PROVIDED"

CCS