ASSESSOR'S RECORD MAP

131-13

SAN SIMEON

LOTS 001-070 & COMMON ELEMENTS B, P, & A

DETAIL 2

(RESUB 16/084 M&P)

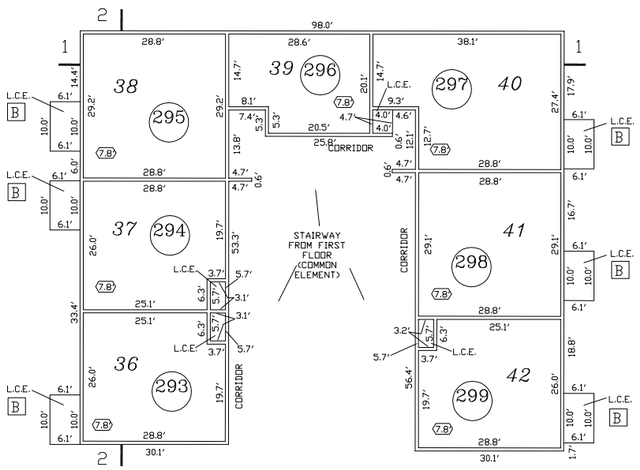

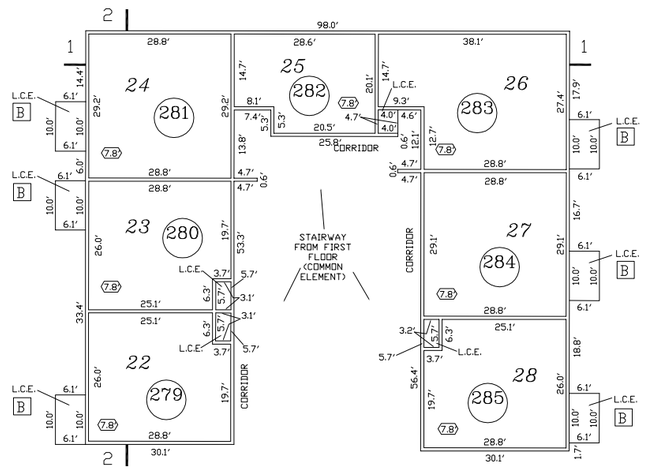

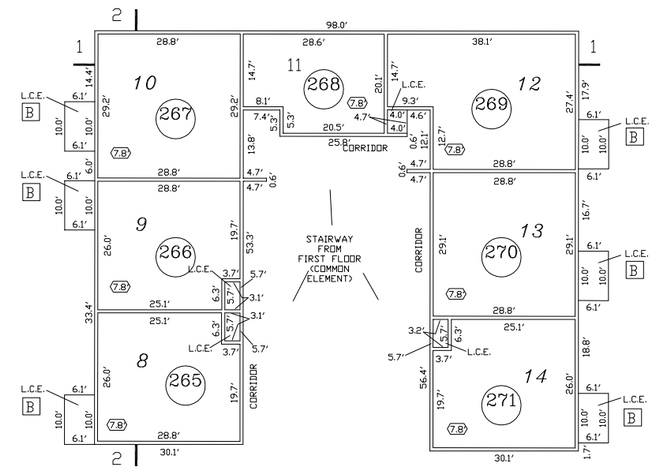

2ND FLR

6141

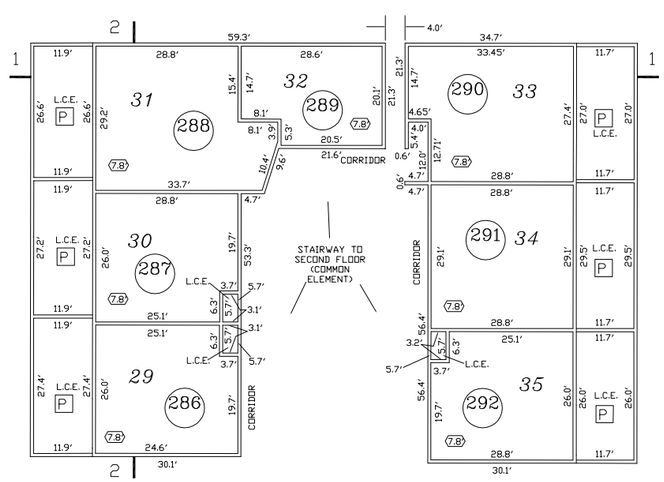

6131

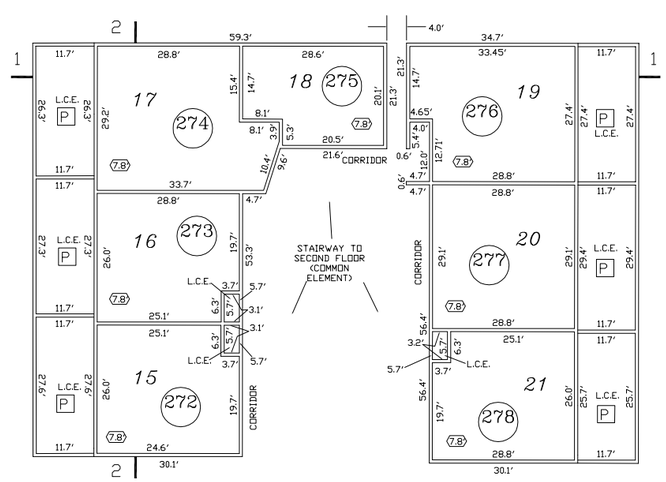

6141

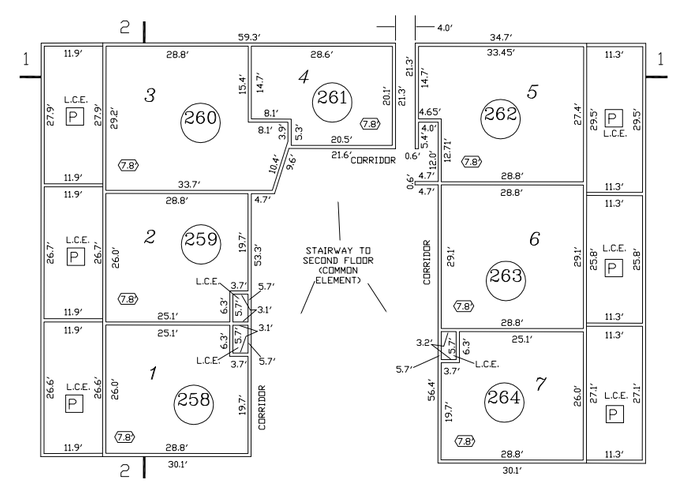

6151

pima county assessor

SEE BOOK 63 PAGE 034 M&P 2008-1

S24,T14S,R14E

:\MP63\63034_02- 07/08/11 REV DML

0 15 30

FEET

"ELECTRONIC DATA PROVIDED"

CCS