ASSESSOR'S RECORD MAP

220-23
220-25

SECTION 33, TOWNSHIP 12.5 SOUTH, RANGE 14 EAST

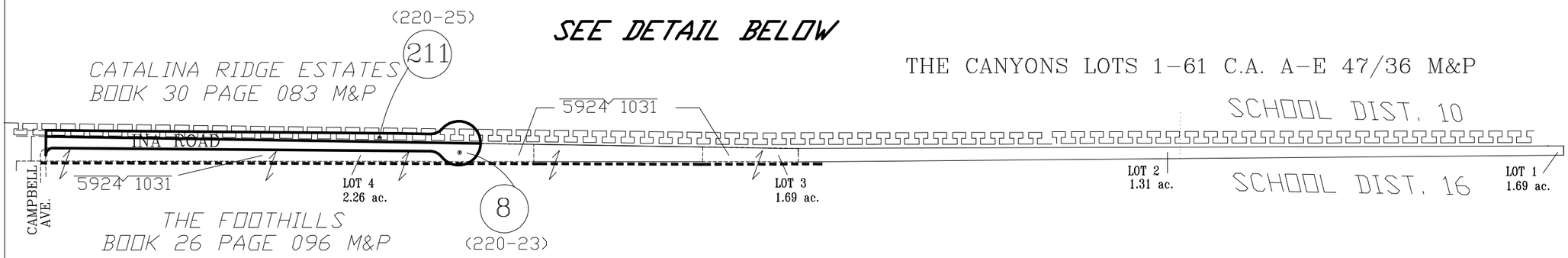

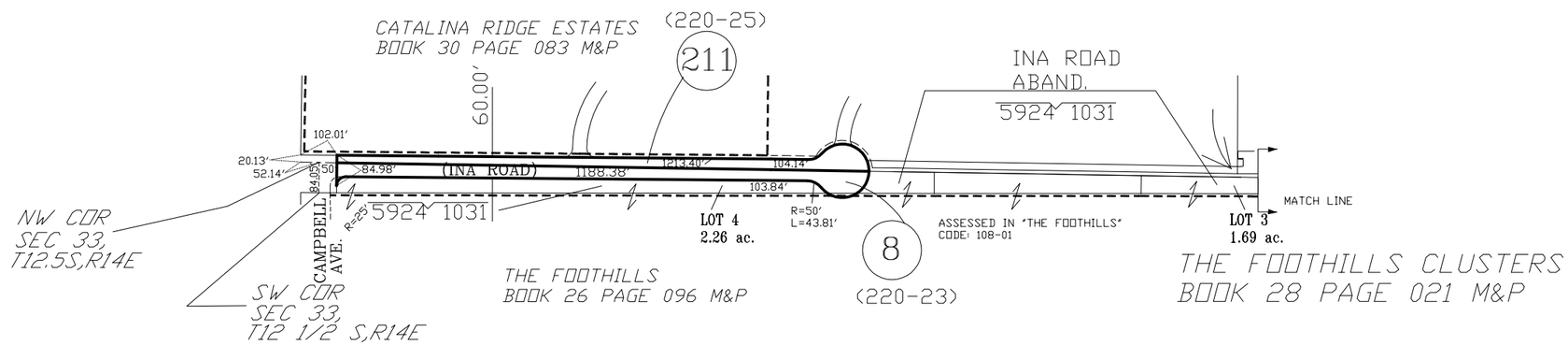

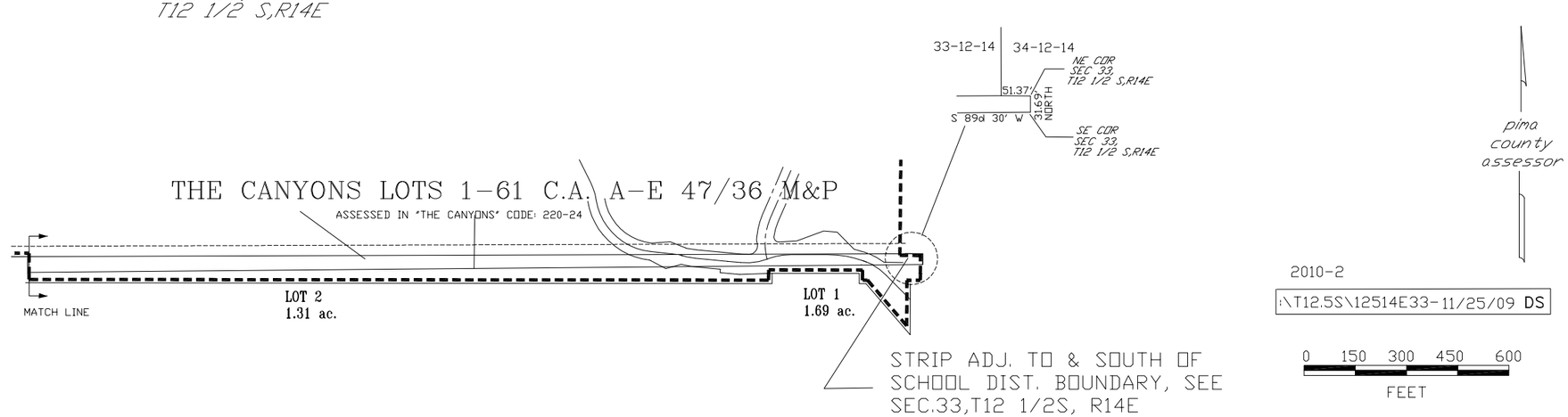

pima county assessor

2010-2

:\T12.5S\12514E33-11/25/09 DS

0 150 300 450 600
FEET