ASSESSOR'S RECORD MAP

119-44

SECTION 31, TOWNSHIP 14 SOUTH, RANGE 13 EAST

DETAIL 1 NE 4

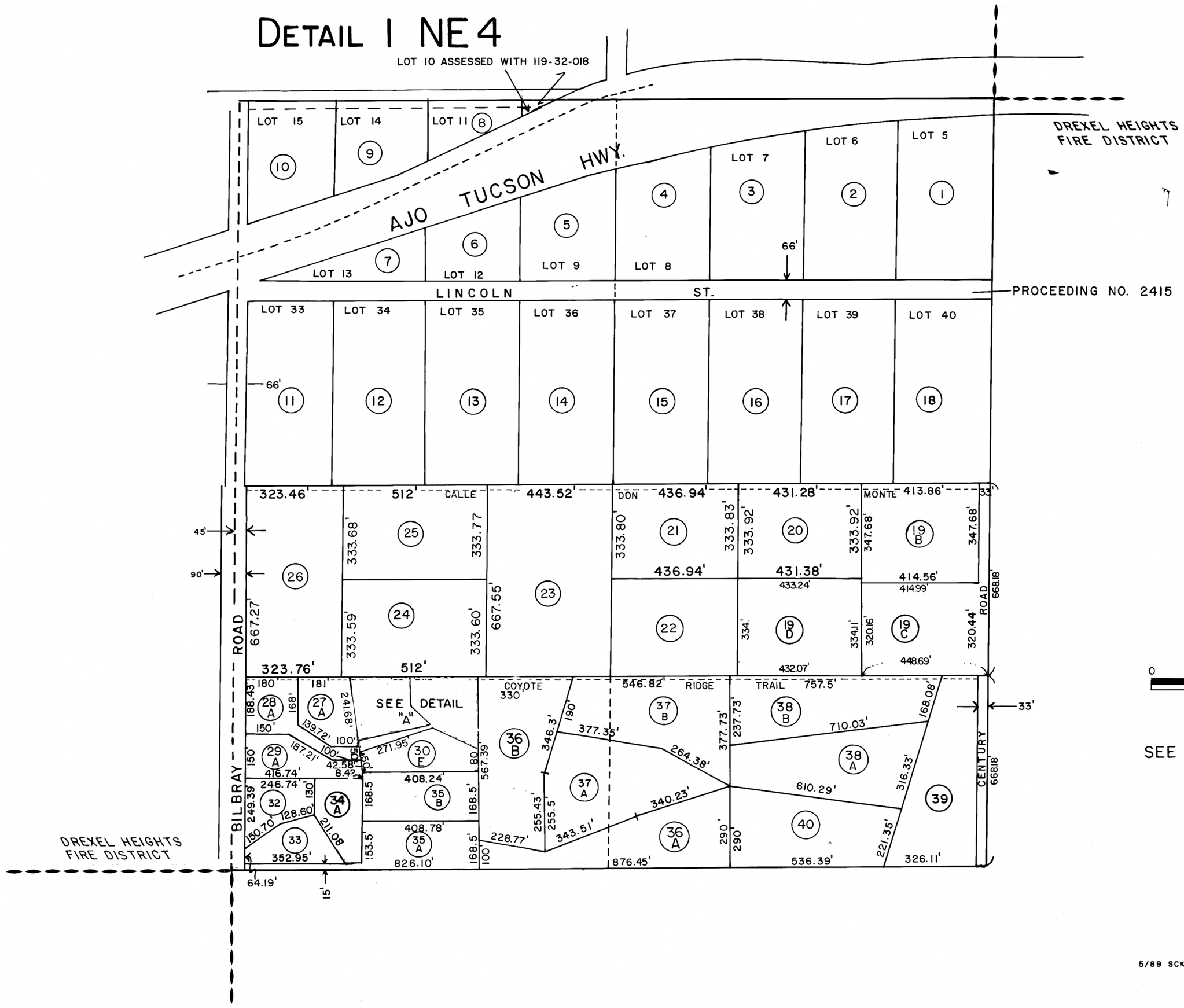

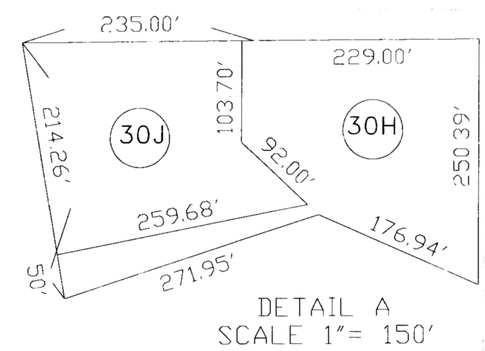

0 150 300 450 600
FEET

SEE BOOK 3 PAGE 44 R.S.

2020-2

5/89 SCK

SCANNED

M1413311