ASSESSOR'S RECORD MAP

303-10

SECTION 05, TOWNSHIP 16 SOUTH, RANGE 14 EAST
DETAIL 2 SW 1/4

Note: This 1/4 section blocked from a township-range map.

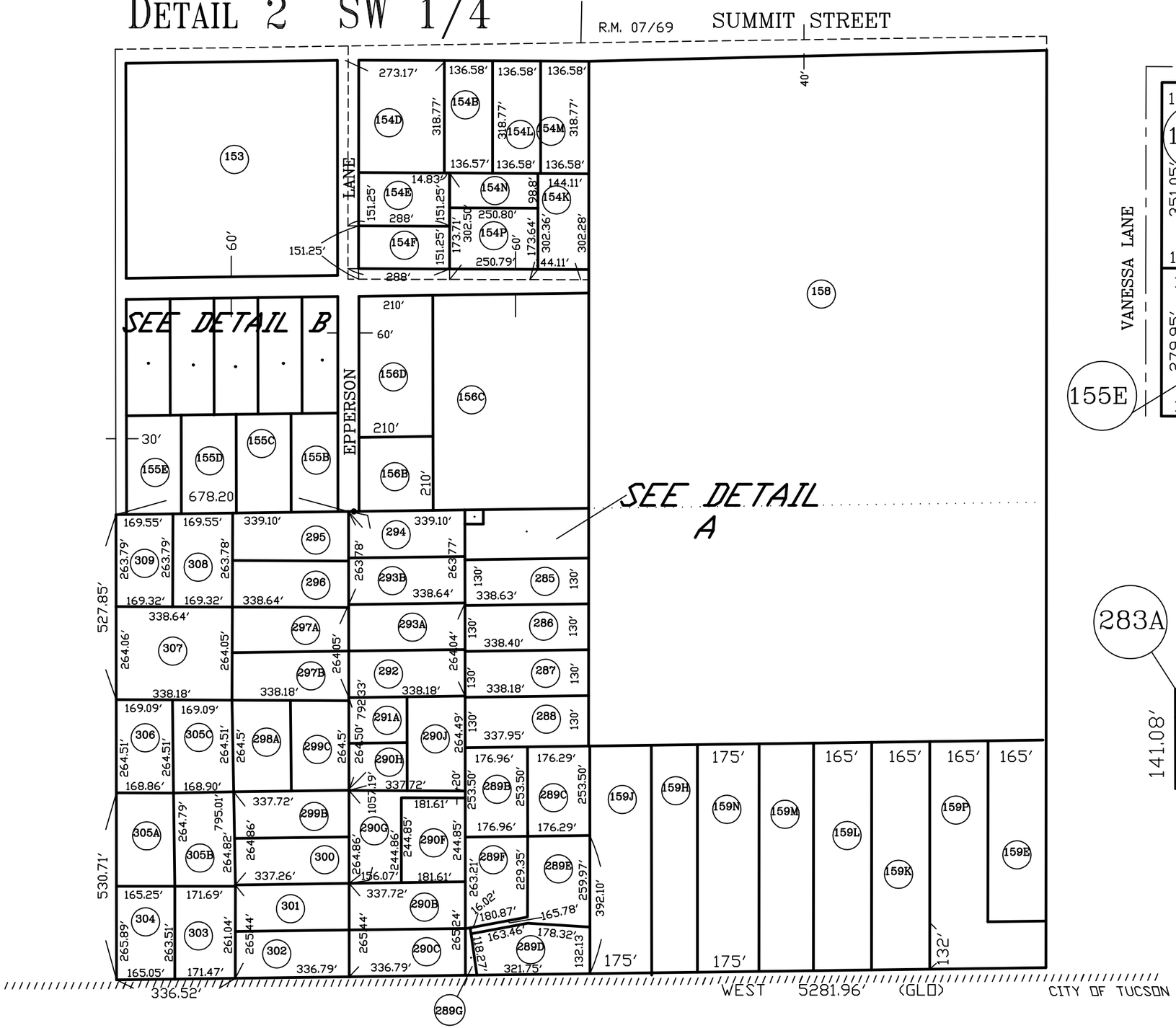

DETAIL B
SCALE 1"=200'

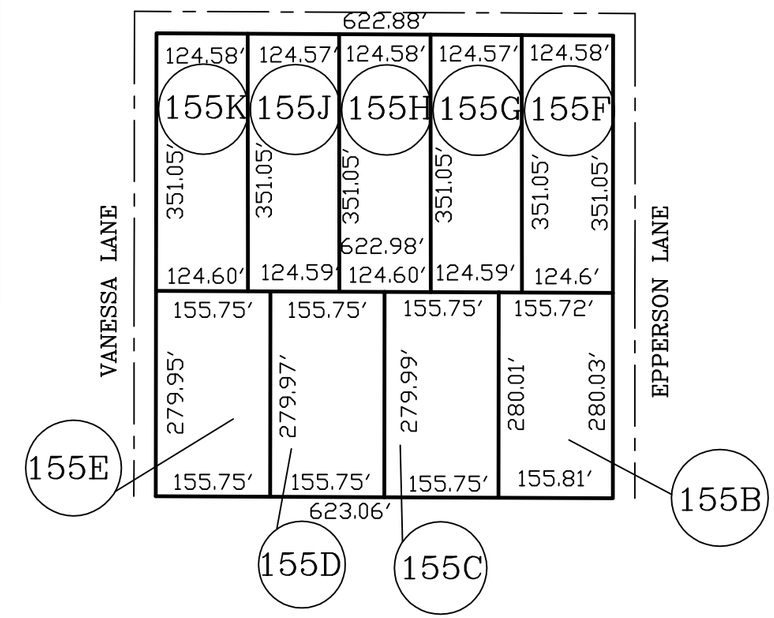

DETAIL A
SCALE 1"=150'

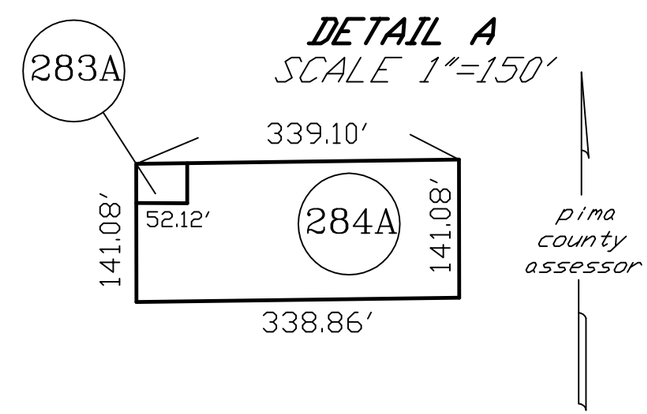

2012-1

i\T16S\R14E\S05_02-06/01/12

0 150 300 450 600
FEET