ASSESSOR'S RECORD MAP

303-10

SECTION 05, TOWNSHIP 16 SOUTH, RANGE 14 EAST

DETAIL 3 SW 1/4

Note: This 1/4 section blocked from a township-range map.

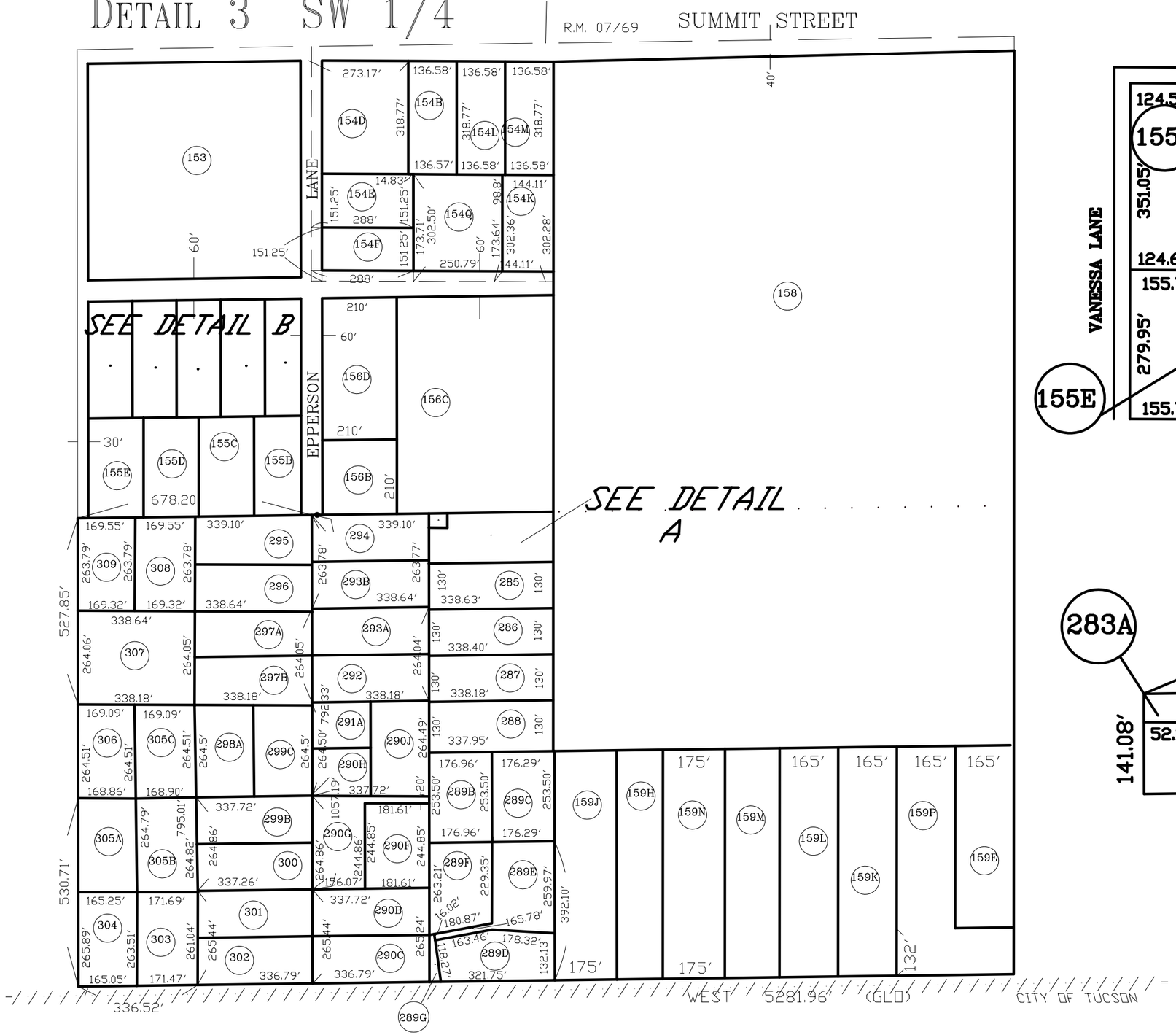

DETAIL B

SCALE 1"=200'

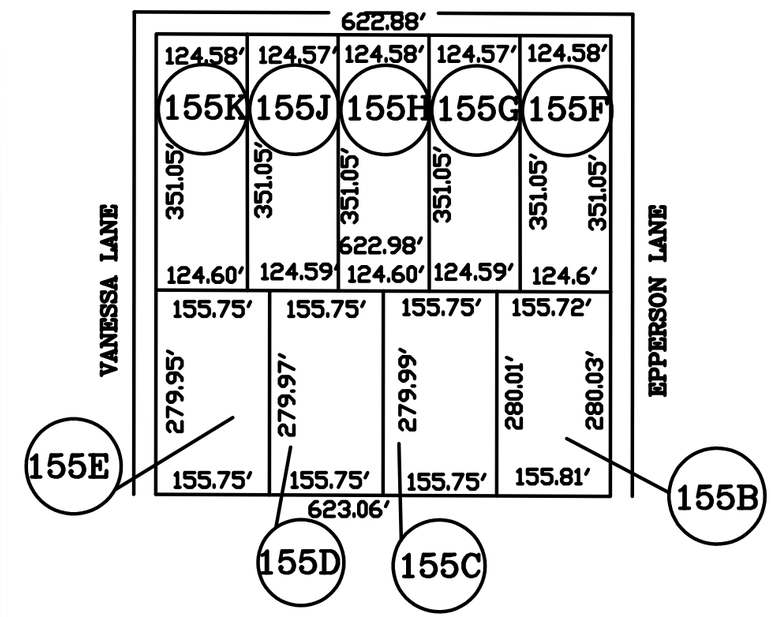

DETAIL A

SCALE 1"=150'

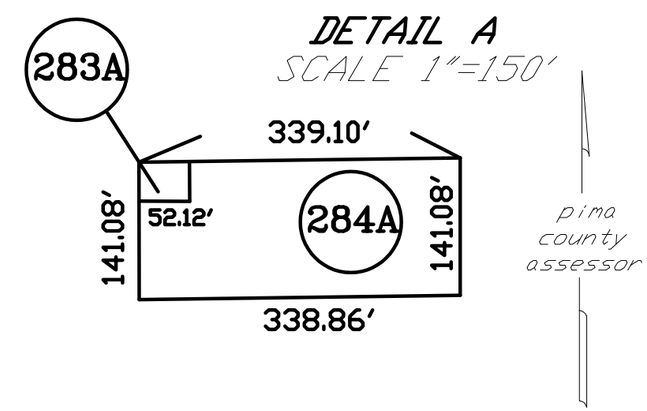

2021-1 SD:10/13/2020

:\T16S\1614E053- 10/13/20 JLW JK

0 150 300 450 600

FEET