Assessor's Record Map

303-23

Section 02, Township 17 South, Range 12 East

Details 1-8

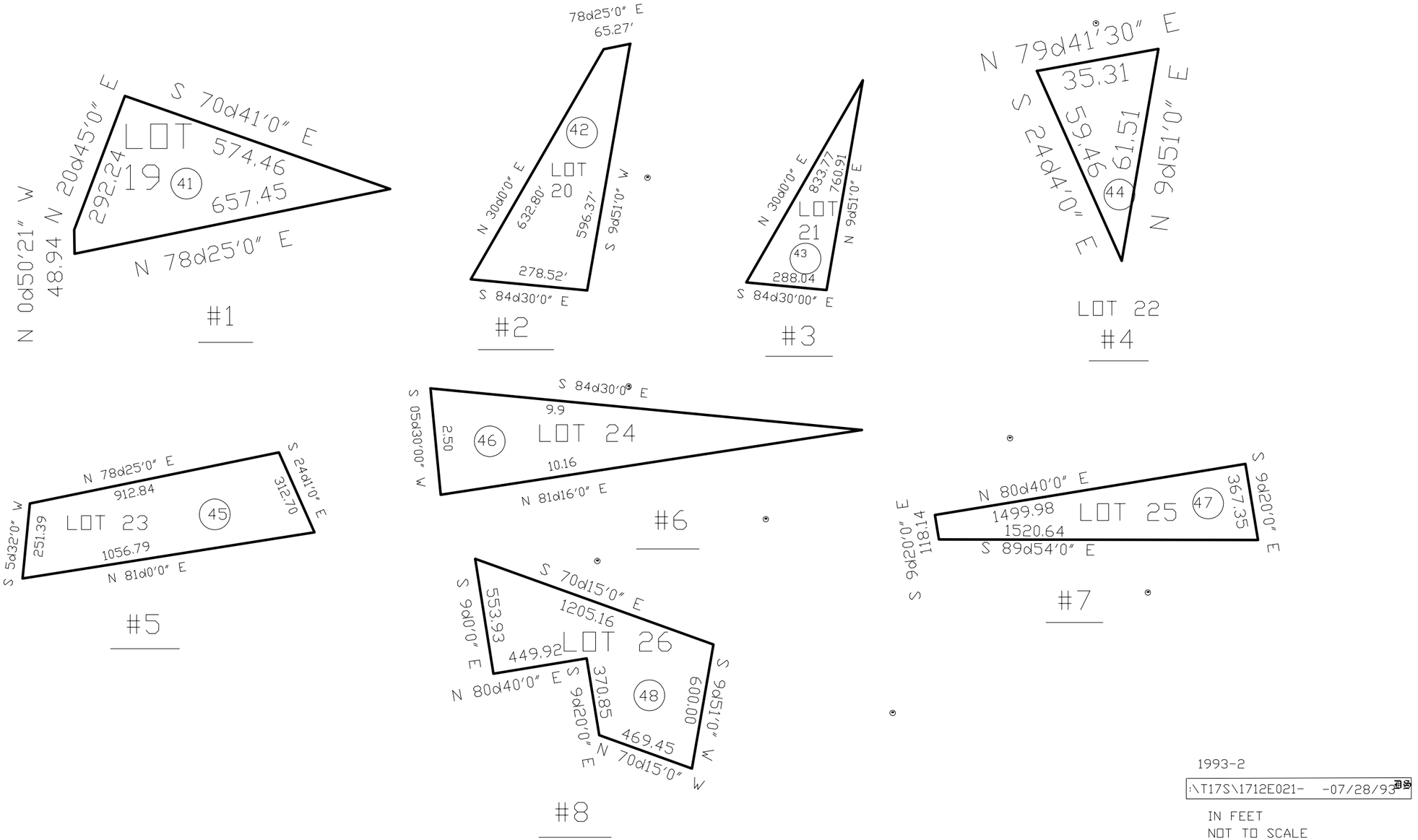

1993-2

:\T17S\1712E021- -07/28/93 DB

IN FEET
NOT TO SCALE