ASSESSOR'S RECORD MAP

302-57

FORMERLY
302-24

SECTION 22, TOWNSHIP 21 SOUTH, RANGE 10 EAST

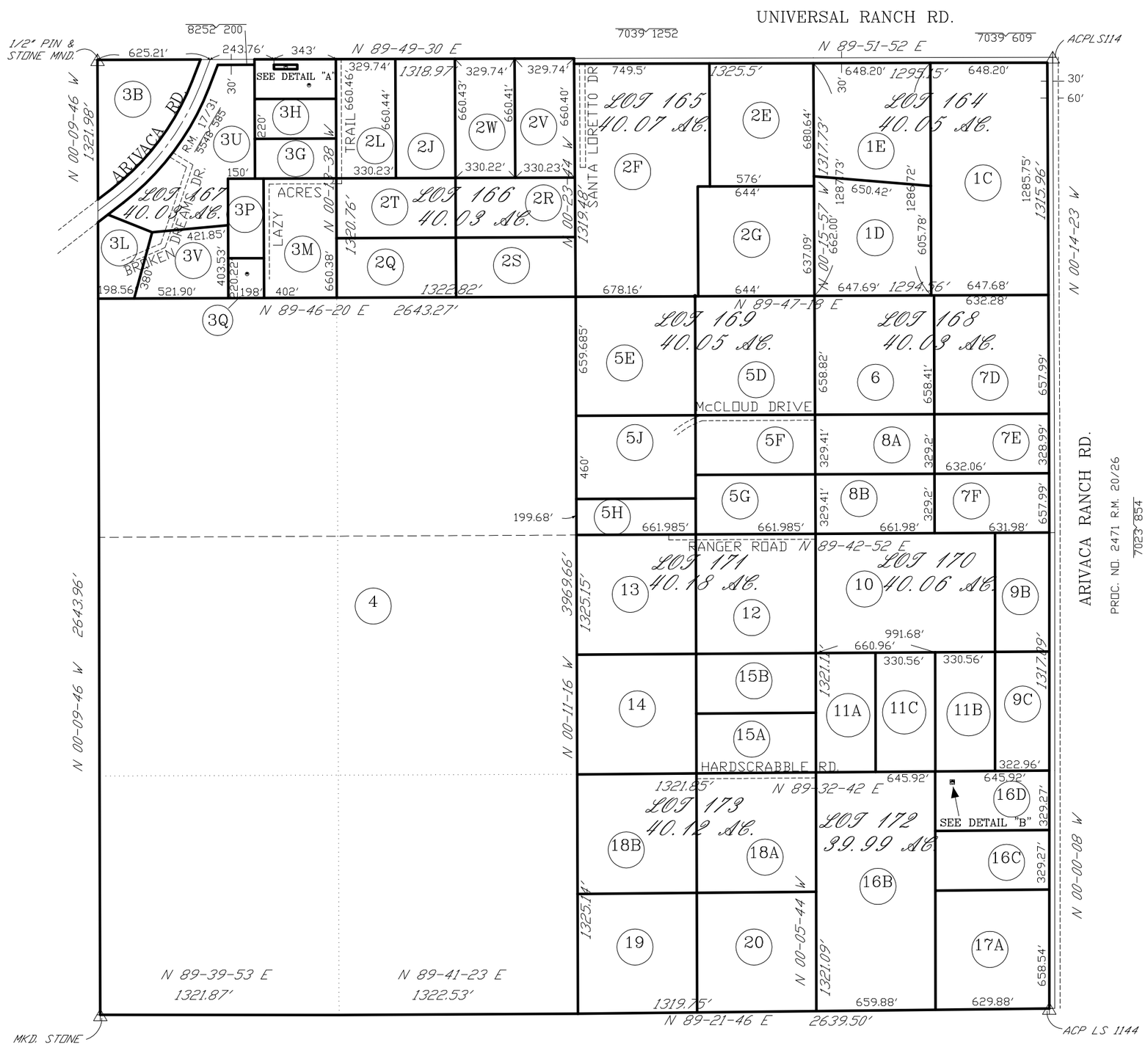

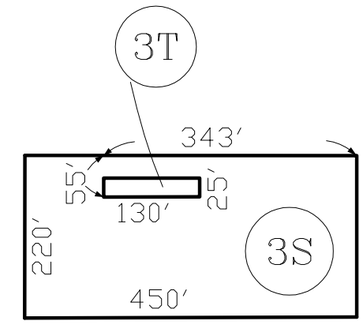

DETAIL "A"
SCALE: 1=200

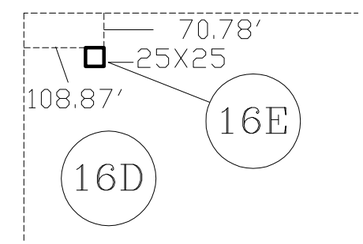

DETAIL "B"
SCALE: 1=200

pima county assessor

2015-1

:\T21S\2110E22- 04/30/14 gk

SEE BOOK 1, PAGE 72, R.S.
SEE BOOK 4, PAGE 40, R.S.
ARIVACA LAKE ESTATES

0 300 600 900 1200
FEET